Town of Elizabeth

Board of Trustees Workshop
Ward Discussion

Tuesday, May 13, 2025, at 6:00 PM

Board of Trustees Regular Meeting

Tuesday, May 13, 2025 at 7:00 PM

Town Hall, 151 S. Banner Street

Conferencing Access Information: This is viewing-only access.
Zoom link to view meeting
Join via phone: 1 669 900 9128 **Meeting ID:** 816 4512 0241
Meeting Passcode: 595761

Call to Order

Roll Call

Pledge of Allegiance

Public Comment

This is a meeting of the Board of Trustees held in public. We welcome you here and thank you for your time and concerns. When you are recognized, please stand and state your name and address to the Board. Your comments will be limited to 5 minutes. If many speakers are anticipated, the Mayor may (a) shorten the time limit; (b) ask speakers to limit themselves to new information and points of view not already covered by previous speakers; and/or (c) limit the total time of public comment to allow the Board to proceed to consider items set on the regular meeting agenda. The Board of Trustees may not respond to your comments during this meeting, but rather take your comments and suggestions under advisement and your questions will be directed to the appropriate person or department for follow-up. Personal attacks against Board Members, Administrative Staff, or Employees will not be recognized. If a response from Staff is requested, the Mayor will direct Staff to have a response at the next regularly scheduled Board meeting.

Agenda Changes

Consent Agenda

1. Minutes of the Regular Meeting of April 22, 2025

2. Minutes of the Special Meeting of April 30, 2025

Proclamations

3. Public Works Week

Presentations

4. Colorado Parks and Wildlife - Casey Westbrook

New Business

5. Discussion and possible direction to issue a Request for Proposals (RFP) for a Compensation Study and Pay Equity Analysis - Patrick Davidson

6. Discussion and possible action on Resolution 25R19, a Resolution authorizing the Town Administrator to execute an Intergovernmental Agreement between the Town of Elizabeth, the Elizabeth School District, and the Elizabeth Fire Protection District for a fuel facility - Patrick Davidson

7. Discussion and possible action on Resolution 25R20, a Resolution authorizing the Mayor to execute an amended Site Plan Agreement regarding the Banner Street Paired Homes - Patrick Davidson

Old Business

8. Discussion and possible action on Ordinance 25-06, an Ordinance to adopt the 2025 Water and Sewer Standards - Mike DeVol

Management Monitoring Reports

9. Management Monitoring Reports

Student Liaison Report

Board of Trustees Report

10. Board Reports

Minutes

11. Minutes of the Historic Advisory Board Meeting of February 3, 2025

Adjournment

BOARD OF TRUSTEES – RECORD OF PROCEEDINGS
APRIL 22, 2025

CALL TO ORDER
The Regular Meeting of the Board of Trustees of the Town of Elizabeth was called to order on Tuesday, April 22, 2025, at 7:04 p.m. by Mayor Angela Ternus.

ROLL CALL
Mayor Angela Ternus, Mayor Pro Tem Tracy Hutchins, and Trustees Loren Einspahr, Michael Schroder, and Steve Gaither were present. Trustee Conley was absent. There was a quorum to do business.

Also present were Town Administrator Patrick Davidson, Town Clerk Michelle Oeser, Public Works Director Mike DeVol, Assistant Public Works Director James McErnie, and Police Chief Jeff Engel. Student Liaison Landen Sherlock was not present.

PLEDGE OF ALLEGIANCE
Mayor Ternus led the Board in the Pledge of Allegiance.

PUBLIC COMMENT
Paul Schwarzkopf – Town of Elizabeth Resident.

AGENDA CHANGES
No agenda changes from the Administration.

No Agenda changes from the Board.

Agenda set.

CONSENT AGENDA
1. Minutes of the Regular Meeting of April 8, 2025

Motion by Trustee Einspahr, seconded by Trustee Schroder, to approve the consent agenda as presented.
The vote of those Trustees present was 5 in favor and 0 opposed. The motion passed unanimously.

2. Swear In Officer Brett Cutler

Chief Engel introduced Officer Cutler. Officer Cutler spoke to the Board. Ms. Oeser swore Officer Cutler in.

PROCLAMATION

3. Arbor Day

Mayor Ternus read the Arbor Day Proclamation.

4. National Police Week

Mayor Ternus read the National Police Week Proclamation.

5. 56th Annual Professional Municipal Clerk's Week

Mayor Ternus read the 56th Annual Professional Municipal Clerk's Week Proclamation.

Mayor Ternus closed the regular meeting and entered the public hearing at 7:24 pm.

PUBLIC HEARING

6. Dads of Elbert County Special Event Application

Ms. Oeser provided a Staff report.

Justin Hundley spoke with the Board as the representative of the event.

Mayor Ternus opened the Public Hearing for public comment. There was no public comment.

Mayor Ternus closed the Public Hearing and returned to the Regular Meeting at 7:31 pm.

NEW BUSINESS

7. Discussion and possible action on the approval of the Dads of Elbert County Special Event Application

Motion by Mayor Pro Tem Hutchins, seconded by Trustee Schroder, to approve the authorization of the Dads of Elbert County Special Event Liquor Permit.
The vote of those Trustees present was 5 in favor and 0 opposed. The motion passed unanimously.

Mayor Ternus closed the Regular Meeting and entered the Public Hearing at 7:32 pm.

PUBLIC HEARING

8. Town of Elizabeth, Friday Night Market Summer Series Special Event Liquor License

Ms. Oeser provided a Staff report.

Mayor Ternus opened the Public Hearing for public comment. There was no public comment.

Mayor Ternus closed the Public Hearing and returned to the Regular Meeting at 7:33 pm.

NEW BUSINESS

9. Discussion and possible action on the approval of the Town of Elizabeth's Special Event Liquor License application for the Friday Night Market Summer Series

Motion by Trustee Schroder, seconded by Trustee Gaither, to approve the authorization of the Town of Elizabeth's Special Event Liquor License application for the Friday Night Market Summer Series Special Event Permit.
The vote of those Trustees present was 5 in favor and 0 opposed. The motion passed unanimously.

10. Discussion and possible action on posting the open Board of Trustees seat

Ms. Oeser provided a Staff report.
The board declared a vacancy for Ward 3. The Board directed the Clerk to post notification of the vacancy.

11. Discussion and possible action on Ordinance 25-06, an Ordinance for the Adoption of 2025 Water and Sewer Standards

Mr. DeVol provided a Staff report. Discussion followed. Ordinance 25-06 will be on the next meeting agenda.

12. Discussion on the Model Traffic Code Ordinance 25-07, an Ordinance repealing and reenacting Article 1 of Chapter 8 of the Elizabeth Municipal Code adopting by reference the 2024 Model Traffic Code

Mr. Davidson and Chief Engel provided a Staff report.

The Board provided Staff with direction to publish a Public Hearing Notice for Ordinance 25-07.

13. Discussion and possible action on Resolution 25R18, a Resolution authorizing the Director of Public Works, or his designee, to enter into a contract for the construction and completion of the Depot Parking Lot

Mr. DeVol and Mr. Davidson provided a Staff report.

Motion by Mayor Pro Tem Hutchins, seconded by Trustee Einspahr, to approve Resolution 25R18, a Resolution authorizing the Director of Public Works, or his designee, to enter into a contract for the construction and completion of the Depot Parking Lot.
By a roll call vote, the vote of those Trustees present was 2 in favor and 3 opposed. Mayor Ternus, Mayor Pro Tem Hutchins, and Schroder opposed. The motion did not pass.

A Special Meeting to revisit Resolution 25R18 was set for Wednesday April 30th at 7:00 pm.

14. Discussion and possible action on Resolution 25R19, a Resolution approving a Scope of Work Proposal agreement with Applied Ingenuity of Hudson, Colorado for the cleaning and re-equipping of the Denver Well

Mr. DeVol and Mr. Davidson provided a Staff report.

Motion by Mayor Ternus, seconded by Trustee Schroder, to approve Resolution 25R19, a Resolution approving a Scope of Work Proposal agreement with Applied Ingenuity of Hudson, Colorado for the cleaning and re-equipping of the Denver Well.
The vote of those Trustees present was 5 in favor and 0 opposed. The motion passed unanimously.

MANAGEMENT REPORTS

- Town Administrator Patrick Davidson:
  - Discussion on future workshops.

- Police Chief Jeff Engel:
  - Reviewed his written report.
  - Stated it was a very busy weekend.

- Public Works Director Mike DeVol:
  - Discussion on the Gold Creek Wastewater Treatment Plant permit.
  - A new wastewater employee has been hired.

- Town Clerk Michelle Oeser:
  - Ms. Oeser discussed the upcoming Fall CML District meeting.
  - The movie for the Movie and Birthday Bash was selected.
  - Discussion on the April Senior Luncheon.

STUDENT LIAISON REPORT

- Student Liaison Landen Sherlock
  - A written report was provided to the Board.

BOARD OF TRUSTEE REPORTS

- Ward 1: Mayor Pro Tem Tracy Hutchins:
  - Ms. Hutchins discussed road sign replacement.

- Ward 2: Trustee Steve Gaither:
  - Mr. Gaither attended the STARS Banquet.

- Ward 2: Trustee Mike Schroder:
  - Mr. Schroder discussed downspout issues on Main Street.

- Mayor Ternus:
  - Discussion on charging people out of town to dispose of wood brush at the Public Works Shop.

ADJOURNMENT

Motion by Trustee Gaither, seconded by Trustee Einspahr, to adjourn the meeting at 8:48 p.m. The vote of those Trustees present was unanimously in favor. Motion carried.

_____	_____
Town Clerk Michelle Oeser	Mayor Angela Ternus

BOARD OF TRUSTEES – RECORD OF PROCEEDINGS
APRIL 30, 2025

CALL TO ORDER
The Special Meeting of the Board of Trustees of the Town of Elizabeth was called to order on Wednesday, April 30, 2025, at 7:00 p.m. by Mayor Angela Ternus.

ROLL CALL
Mayor Angela Ternus, Mayor Pro Tem Tracy Hutchins, and Trustees Loren Einspahr, Michael Schroder, Dave Conley, and Steve Gaither were present. There was a quorum to do business.

Also present were Town Administrator Patrick Davidson, Town Clerk Michelle Oeser, Public Works Director Mike DeVol, Assistant Public Works Director James McErnie, and Police Chief Jeff Engel.

NEW BUSINESS

1. Discussion and possible action on Resolution 25R18, a Resolution authorizing the Mayor, to enter into a contract for the construction and completion of the Depot Parking Lot

Motion by Trustee Conley, seconded by Trustee Gaither, to approve Resolution 25R18, a Resolution authorizing the Mayor, to enter into a contract for the construction and completion of the Depot Parking Lot.
By a roll call vote, the vote of those Trustees present was 5 in favor and 1 opposed. Mayor Ternus, opposed. The motion passed.

ADJOURNMENT

Motion by Trustee Gaither, seconded by Mayor Pro Tem Hutchin, to adjourn the meeting at 7:21 p.m. The vote of those Trustees present was unanimously in favor. Motion carried.

_____ _____
Town Clerk Michelle Oeser Mayor Angela Ternus

National Public Works Week Proclamation

May 18–24, 2025

"People, Purpose, Presence"

WHEREAS, public works professionals focus on infrastructure, facilities, and services that are of vital importance to sustainable and resilient communities and to public health, high quality of life, and well-being of the people of **Town of Elizabeth**; and,

WHEREAS, these infrastructure, facilities, and services could not be provided without the dedicated efforts of public works professionals, who are engineers, managers, and employees at all levels of government and the private sector, who are responsible for rebuilding, improving, and protecting our nation's transportation, water supply, water treatment and solid waste systems, public buildings, and other structures and facilities essential for our citizens; and,

WHEREAS, it is in the public interest for the citizens, civic leaders, and children in **Town of Elizabeth** to gain knowledge of and maintain an ongoing interest and understanding of the importance of public works and public works programs in their respective communities; and,

WHEREAS, the year 2025 marks the 65th annual National Public Works Week sponsored by the American Public Works Association/Canadian Public Works Association be it now,

RESOLVED, I, **Angela Ternus, Mayor,** do hereby designate the week of May 18–24, 2025, as National Public Works Week. I urge all citizens to join with representatives of the American Public Works Association and government agencies in activities, events, and ceremonies designed to pay tribute to our public works professionals, engineers, managers, and employees and to recognize the substantial contributions they make to protecting our national health, safety, and advancing quality of life for all.

IN WITNESS WHEREOF, I have hereunto set my hand and caused the Seal of the Town,

DONE at the **Town of Elizabeth,** this _____ day of _____ 2025.

_____ _____

Angela Ternus, Mayor Attest: Michelle M. Oeser, Town Clerk

Elizabeth Deer Management Plan

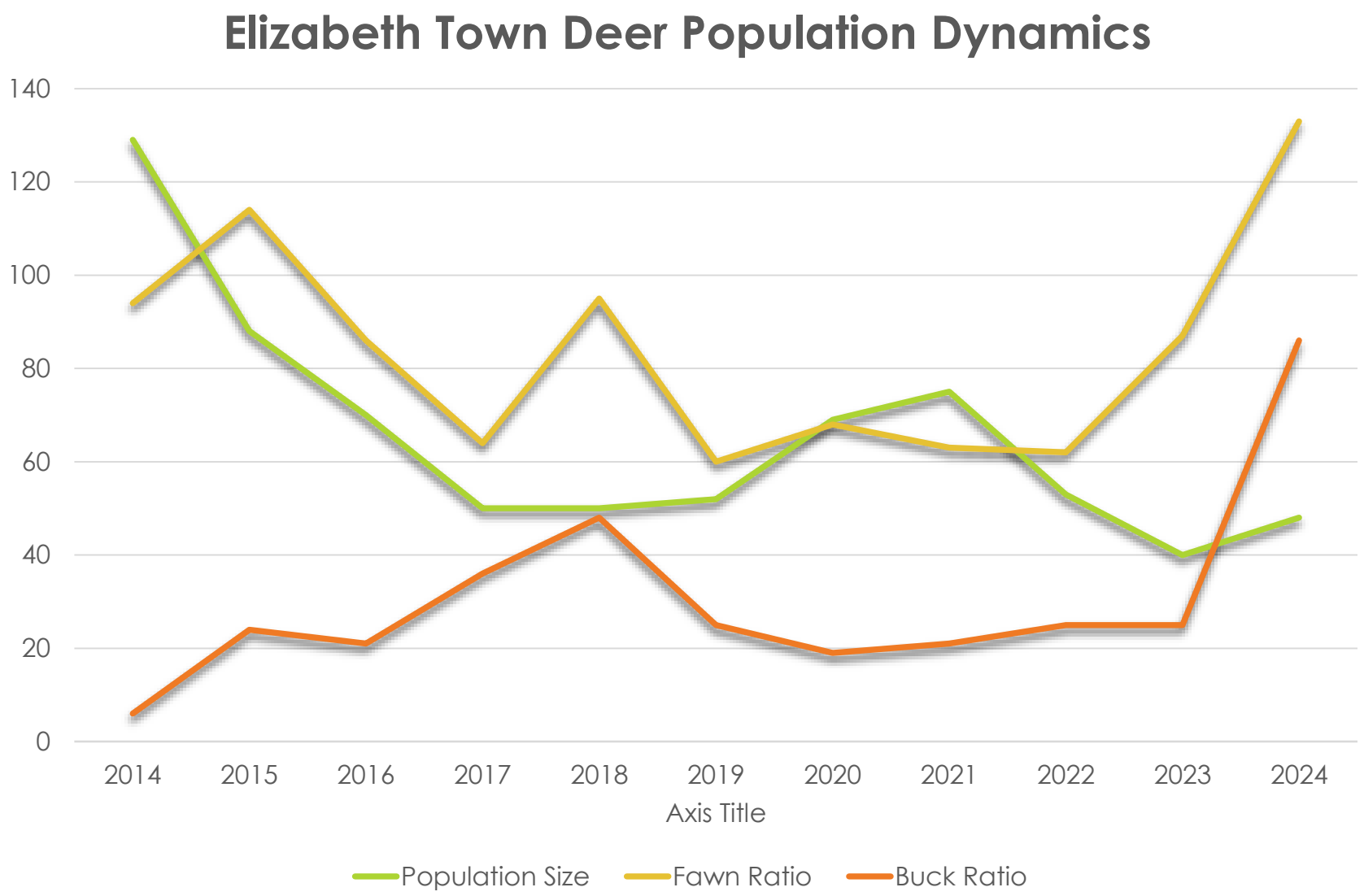
Elizabeth Town Deer Population Dynamics
140
120
100
80
60
40
20
0
2014
2015
2016
2017
2018
2019
2020
2021
2022
2023
2024
Axis Title
Population Size
Fawn Ratio
Buck Ratio

Fawn Recruitment
Fawns Per 100 does
140
120
100
80
60
40
20
0
94
114
86
64
95
60
68
63
62
87
133
2014
2015
2016
2017
2018
2019
2020
2021
2022
2023
2024
Time

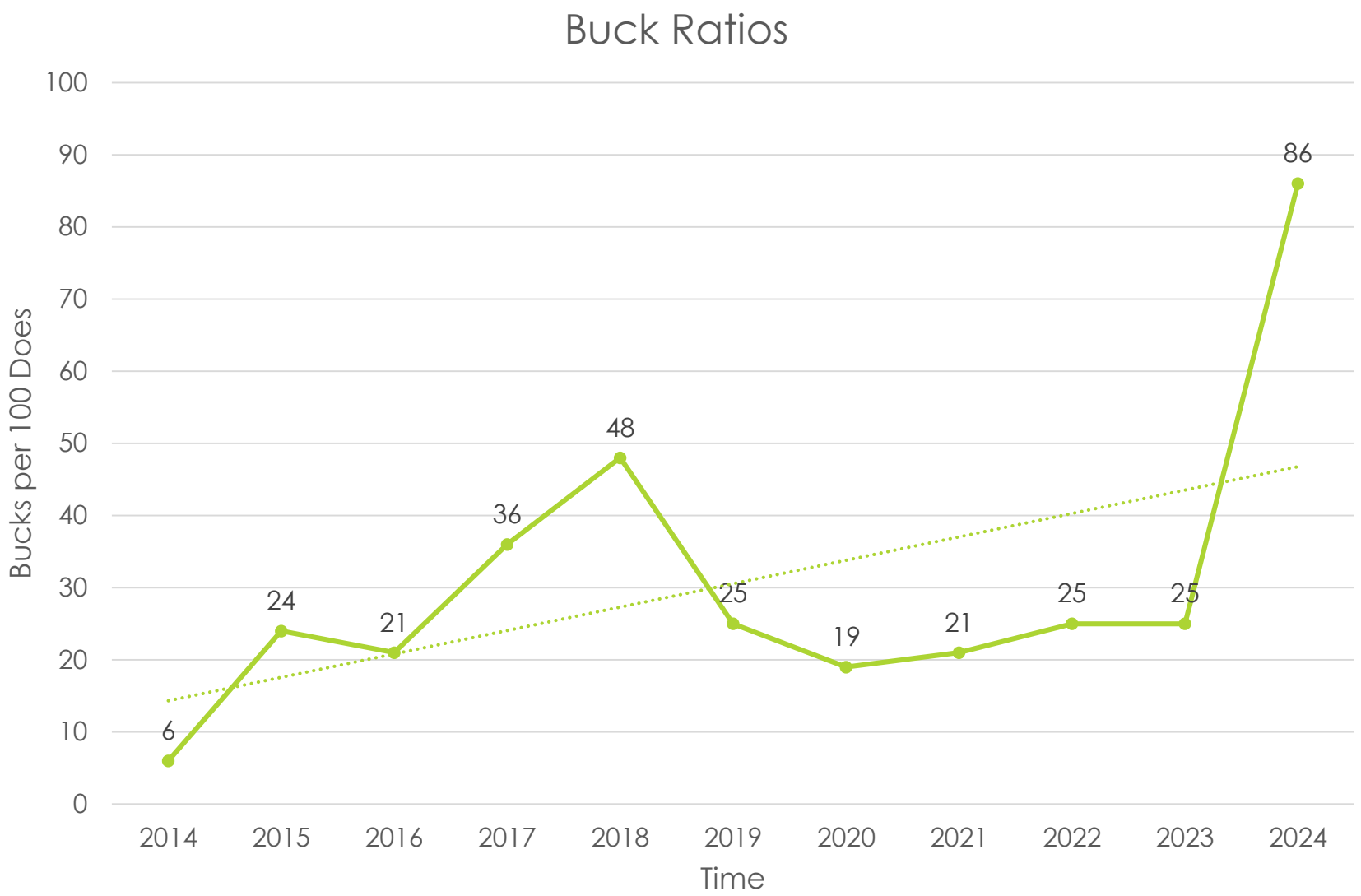
Buck Ratios
Bucks per 100 Does
100
90
80
70
60
50
40
30
20
10
0
6
24
21
36
48
25
19
21
25
25
86
2014
2015
2016
2017
2018
2019
2020
2021
2022
2023
2024
Time

HARVEST VS POPULATION RESPONSE

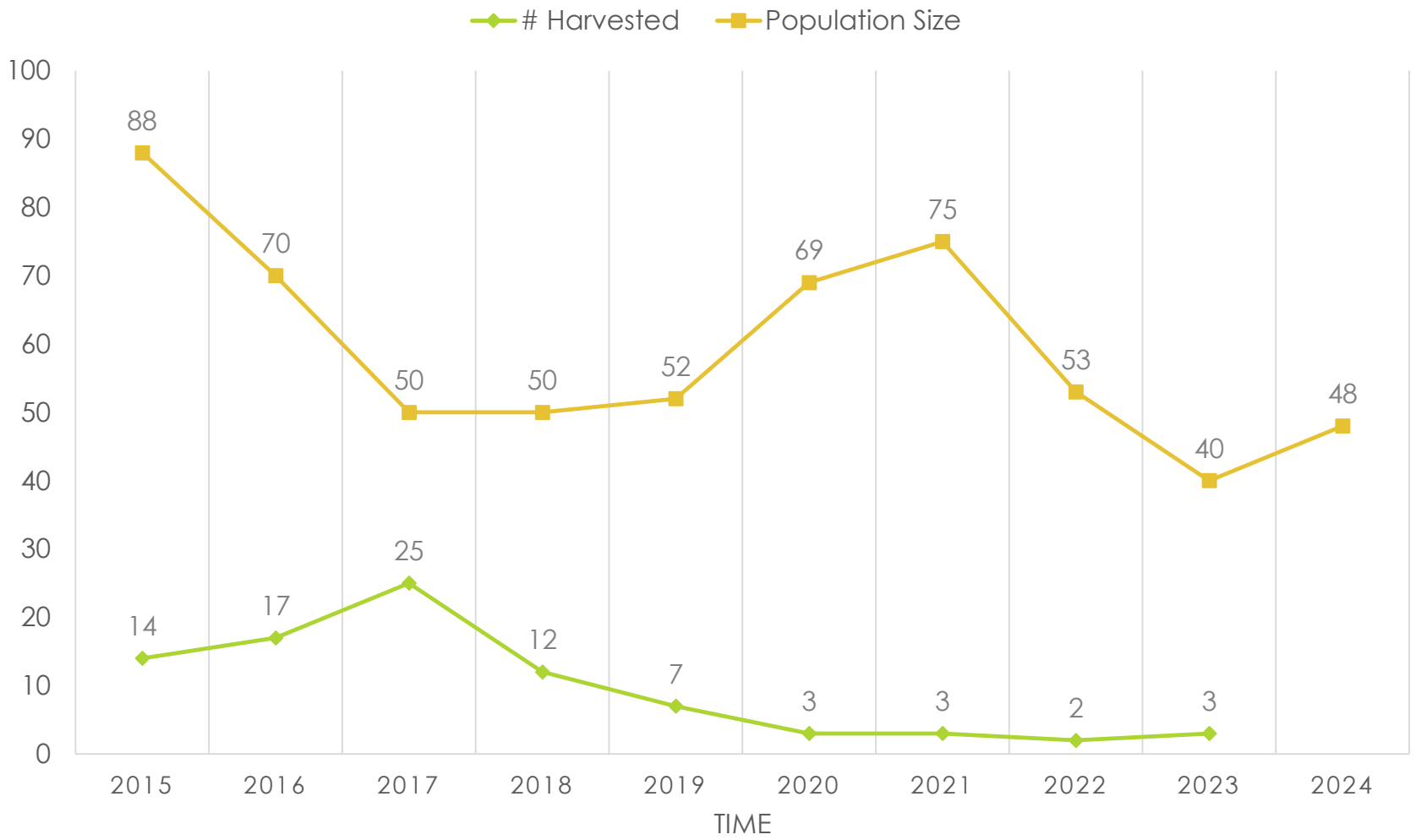

Meat Donated to Community
1200
1000
800
600
400
200
0
Pounds Donated Meat
2014
2015
2016
2017
2018
2019
2020
2021
2022
2023
Harvest Year
Series 1

Chronic Wasting Disease

- Mandatory Testing for CWD in 2024
- 2019 monitoring (goal <5%)
  - DAU = 6.5%
  - GMU 104 Doe = 1.4%
  - GMU 104 Bucks = 6.4%
  - Town deer 0 of 7 does
- Future Mgmt.
  - Deer density reduction
  - Reduce feeding
  - Hot spot mgmt.
  - B/D ratio reduction

CWD Changes After 5 Years

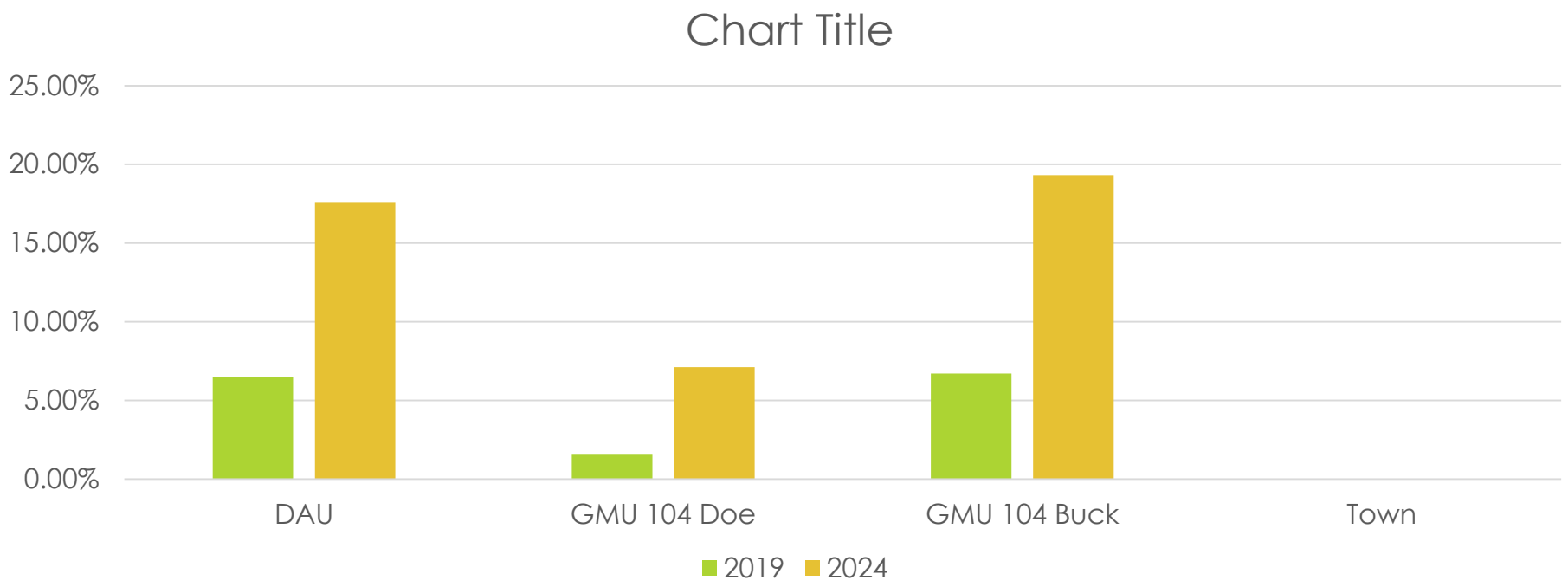

2024 Challenges / Opportunities

- Development and growth impacts on deer and deer movement
- Unlawful deer feeding issues – increase in calls and complaints
- New participants learning the program
- CPW Roadkill database
  - Initiated October 2021
- 10 Deer on this database from Flintwood Road to Rd 21 along HWY 86

CPW Roadkill App 2023 – 2024 Data

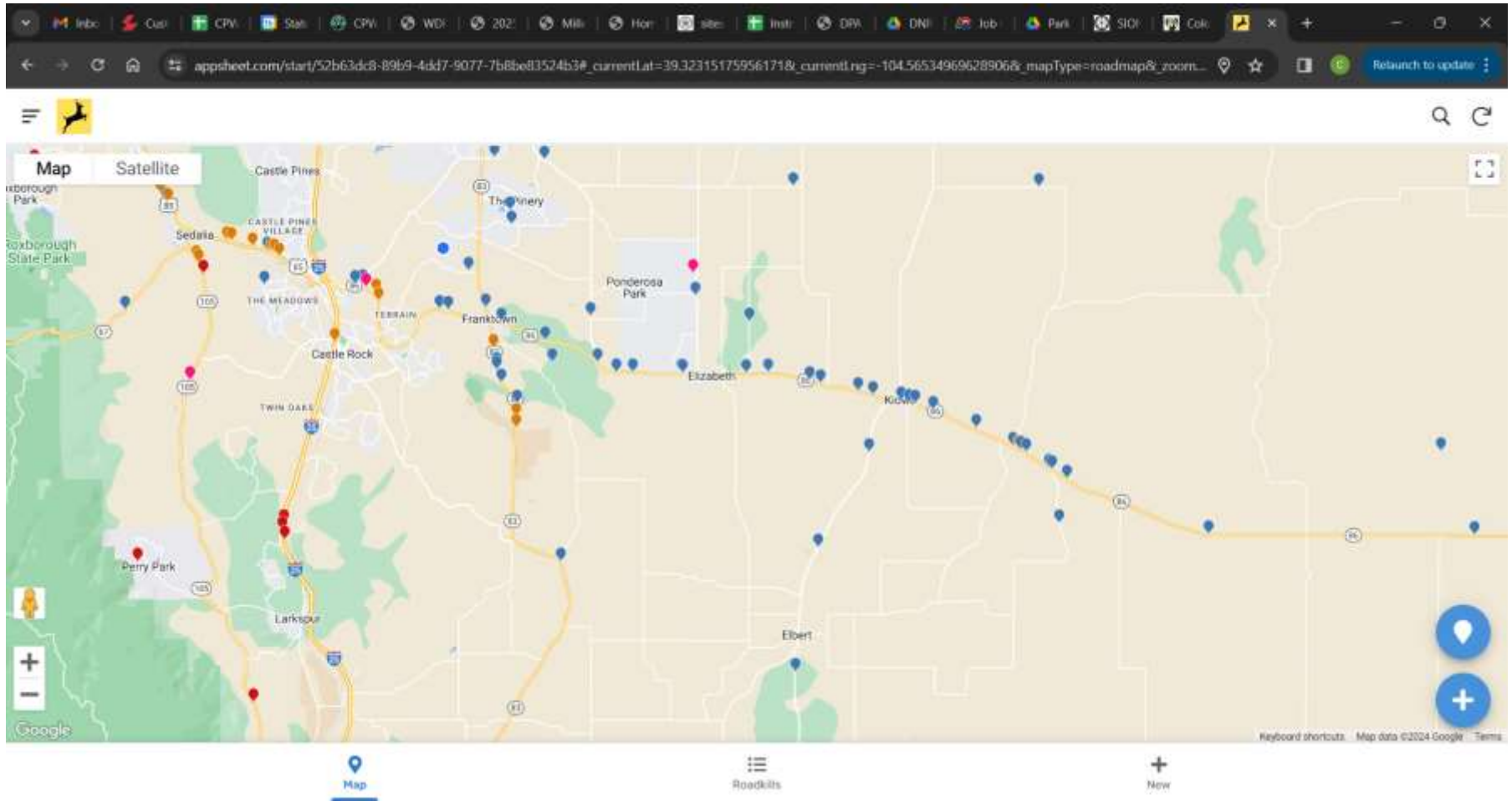

2025 Plan Recommendations

- Status quo regarding plan elements of harvest timing and locations.
- Harvest goal for 2025 to 10 doe deer.
- Vet and recruit 4-6 volunteers to conduct harvest.

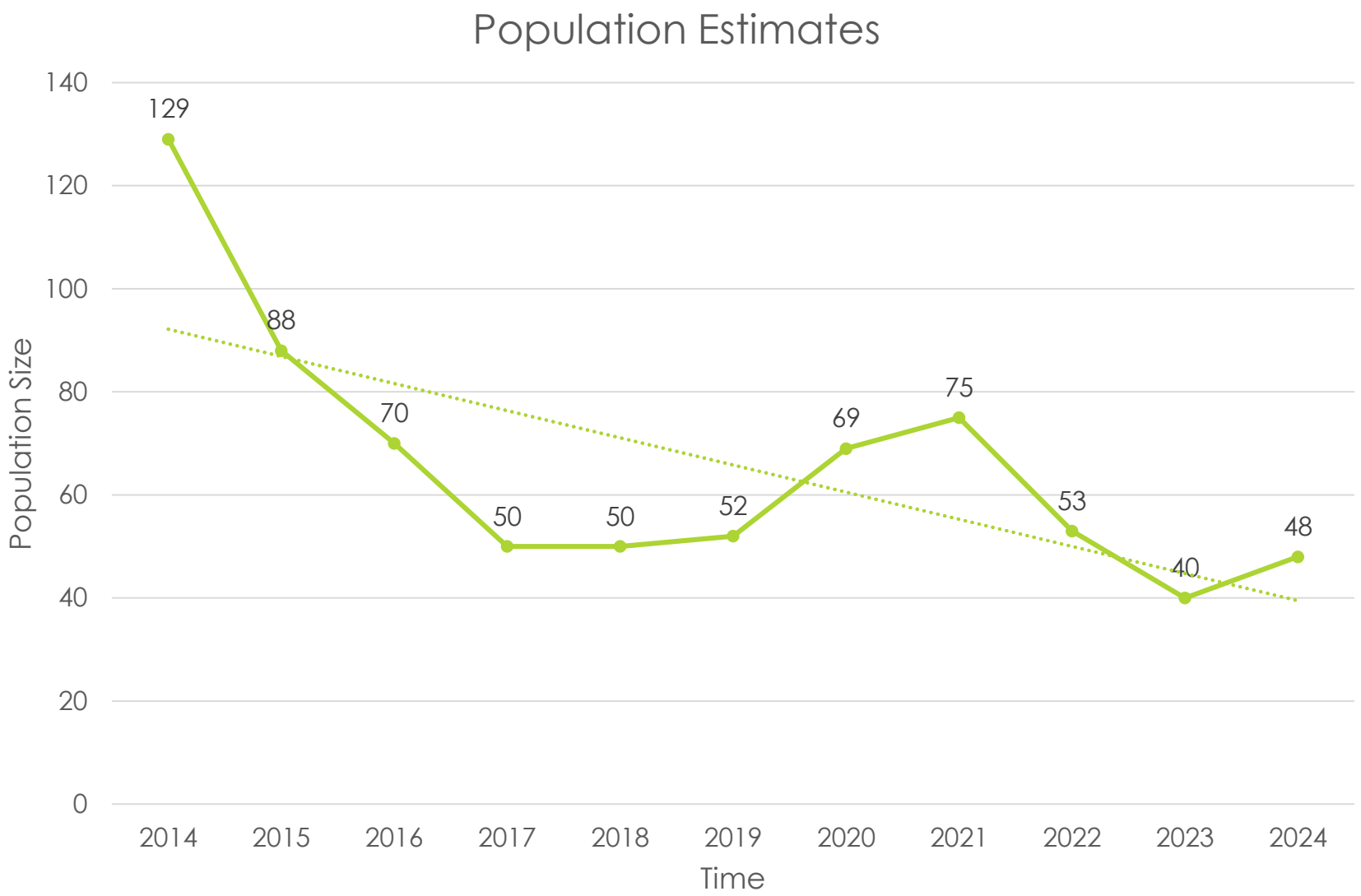
Population Estimates
140
120
100
80
60
40
20
0
Population Size
129
88
70
50
50
52
69
75
53
40
48
2014
2015
2016
2017
2018
2019
2020
2021
2022
2023
2024
Time

<u>Executive Summary 2024 Elizabeth Deer Management Plan:</u>

Program History:

This program was developed in direct response to a long-term history of ongoing human safety, conflict, and deer herd health concerns in Town. Prior to 2014 the Town and Colorado Parks and Wildlife (CPW) had taken an education only approach toward deer management. In approximately 2011 the Town found it necessary to institute an ordinance to prohibit the intentional feeding of deer. Human safety issues resulting from deer, mostly traffic accidents continued to occur as did nuisance conflicts. CPW also began to assess the health of the herd based upon population counts, reproductive rates, animal size / weights, and overall appearance.

Given the trends seen this Deer Management Program was developed in 2014 and has been in place annually ever since. The past decade of active deer management has shown improvements in the metrics used to monitor the program and have generally been seen as a positive for the community.

2024:

Harvest objective for 2023 was 10 deer after showing a slight increase in the deer population over the past several years.

- Actual program harvest in 2024 in Town was zero deer.
- Number of deer put down by CPW increased noticeably in 2024.

No safety issues or conflicts within the community

New recruits participating in the program resulted in a “learning curve” for 2024:

- 3 of 6 program participants were new to the program
- Changes in deer movement patterns and recreational activity within the Town challenged participants

5 year Mandatory CWD monitoring showed possible increase in CWD within Elbert county. Deer feeding is an increasing problem and is closely associated with CWD prevalence.

2025:

Recommend to continue the program to meet population maintenance and herd health goals.

Proposed harvest of 10 animals in 2025.

TO: Honorable Mayor Ternus and Members of the Board of Trustees
FROM: Patrick Davidson, Town Administrator
DATED: May 6, 2025
SUBJECT: Proposed RFP for Compensation Study and Pay Equity Analysis

---

BACKGROUND

In 2019 the Board of Trustees entered into an agreement with CPS HR Consulting to complete a *Total Compensation Report* for the Town. A draft report was prepared in August 2020, but for whatever reason no further action appears to have been undertaken either by CPS HR Consulting or by the Town of Elizabeth. In January 2022 the Town Administrator applied the methodology identified in the 2020 report to build-out a temporary staffing and compensation study. Since that time, adjustments have been made sporadically to the pay scale, but it is resulting in compressions issues among all tiers of the organization.

On March 8, 2025, the Board of Trustees participated in a Strategic Planning Workshop. A report was issued on March 25, 2025, reiterating the desire to pursue an updated Compensation Study. The study, itself, also leads to other goals anticipated in the upcoming years, namely the desire to implement a financial and operations plan to increase police services, and an underlying Facilities Master Plan which would address staffing levels.

On May 3, 2025, the Board of Trustees conducted a follow-up Workshop with Staff to discuss the goals and objectives arising from the Strategic Planning Workshop. The members in attendance reaffirmed the need for a Compensation Study.

Attached is the proposed RFP for the project. In addition, a draft of the Agreement for Professional Services is provided in advance, for review and comment by the Board of Trustees. It is anticipated that once a consultant is selected to complete the Study, the attached Agreement for Professional Services would be executed by the parties.

ANALYSIS

The attached RFP proposes a compensation study to be initiated on an aggressive timeline. Specifically, the RFP would be issued on May 16, 2025, with responses due by June 16, 2025. The final report would be due approximately October 1, 2025, in order to incorporate its findings into the 2026 Town Budget.

STAFF RECOMMENDATION

Staff recommend that a Compensation Study and Pay Equity Analysis be completed as soon as practicable so that the underlying results may be considered, and possibly incorporated, into the 2026 Budget Analysis.

BUDGET CONSIDERATIONS

None at this time. The issuance of the RFP merely requires Staff time for completion. Assuming proposals are received on or before the June 16, 2023, deadline, a budget amendment will likely be required to ensure funding is available for the project.

ATTACHMENTS

DRAFT – Request for Proposals – Compensation Study and Pay Equity Analysis
DRAFT – Proposed Agreement for Professional Services

AGREEMENT FOR PROFESSIONAL SERVICES

THIS AGREEMENT is made and entered into this _____ day of _____ 2025, by and between the Town of Elizabeth, State of Colorado (hereinafter referred to as the "Town") and _____, of _____ (hereinafter referred to as "Consultant").

RECITALS:

A. The Town requires professional services.

B. Consultant has held itself out to the Town as having the requisite expertise and experience to perform the required work for the Project.

NOW, THEREFORE, it is hereby agreed for the consideration hereinafter set forth, that Consultant shall provide to the Town professional consulting services for the Project.

I. SCOPE OF SERVICES

Consultant shall furnish all labor and materials to perform the work and services required for the complete and prompt execution and performance of all duties, obligations, and responsibilities for the Project which are described or reasonably implied from **Exhibit A** which is attached hereto and incorporated herein by this reference.

II. THE TOWN'S OBLIGATIONS/CONFIDENTIALITY

The Town shall provide Consultant with reports and such other data as may be available to the Town and reasonably required by Consultant to perform hereunder. The Consultant shall not disclose project information to third parties, without prior written consent of the Town or pursuant to a lawful court order directing such disclosure. All documents provided by the Town to Consultant shall be returned to the Town. The Town authorizes consultants to retain copies of such data and materials at Consultant's expense.

III. OWNERSHIP OF WORK PRODUCT

The Town acknowledges that the Consultant’s work product is an instrument of professional service. Nevertheless, the products prepared under this Agreement shall become the property of the Town upon completion of the work.

IV. COMPENSATION

A. In consideration for the completion of the services specified herein by Consultant, the Town shall pay in accordance with the schedule of charges in **Exhibit B**, which is attached hereto and incorporated herein by this reference. Invoices will be itemized and include hourly breakdowns for all personnel and other charges. The parties may enter into additional agreements as they may deem necessary for purposes of setting maximum fees for specific projects. In such event, the maximum fee specified herein shall include all fees and expenses incurred by Consultant in performing all services hereunder.

B. Consultant may submit monthly or periodic statements requesting payment. Such request shall be based upon the amount and value of the work and services performed by Consultant under this Agreement except as otherwise supplemented or accompanied by such supporting data as may be required by the Town.

1. All invoices, including Consultant's verified payment request, shall be submitted by Consultant to the Town no later than the twenty-fourth (24th) day of each month for payment pursuant to the terms of this Agreement. In the event Consultant fails to submit any invoice on or before the twenty-fourth (24th) day of any given month, Consultant defers its right to payment pursuant to said late invoice until the twenty-fourth (24th) day of the following month.

2. Progress payments may be claimed monthly for reimbursable costs actually incurred to date as supported by detailed statements, including hourly breakdowns for all personnel and other charges. The amounts of all such monthly payments shall be paid within thirty (30) days after the timely receipt of invoice as provided by this Agreement.

C. The Town has the right to ask for clarification on any Consultant invoice after receipt of the invoice by the Town.

D. In the event payment for services rendered has not been made within forty-five (45) days from the receipt of the invoice for any uncontested billing, interest will accrue at the legal rate of interest. In the event payment has not been made within ninety (90) days from the receipt of the invoice for any uncontested billing, Consultant may, after giving seven (7) days' written notice and without penalty or liability of any nature, suspend all work on all authorized services specified herein. In the event payment in full is not received within thirty (30) days of giving the seven (7) days written notice, Consultant may terminate this Agreement. Upon receipt of payment in full for services rendered, Consultant will continue with all authorized services.

E. Final payment shall be made within sixty (60) calendar days after all data and reports (which are suitable for reproduction and distribution by the Town) required by this Agreement have been turned over to and approved by the Town and upon receipt by the Town

of Consultant's certification that services required herein by Consultant have been fully completed in accordance with this Agreement and all data and reports for the Project.

V. COMMENCEMENT AND COMPLETION OF WORK

Within seven (7) days of receipt from the Town of a Notice to Proceed, Consultant shall commence work on all its obligations as set forth in the Scope of Services or that portion of such obligations as is specified in said Notice. Except as may be changed in writing by the Town, the Project shall be complete, and Consultant shall furnish the Town with the specified deliverables as provided in Exhibit A.

VI. CHANGES IN SCOPE OF SERVICES

A change in the Scope of Services shall constitute any material change or amendment of services or work which is different from or additional to the Scope of Services specified in Section I of this Agreement. No such change, including any additional compensation, shall be effective, or paid unless authorized by written amendment executed by the Town. If Consultant proceeds without such written authorization, then Consultant shall be deemed to have waived any claim for additional compensation, including a claim based on the theory of unjust enrichment, quantum merit or implied contract. Except as expressly provided herein, no agent, employee, or representative of the Town shall have the authority to enter any changes or modifications, either directly or implied by a course of action, relating to the terms and scope of this Agreement.

VII. PROFESSIONAL RESPONSIBILITY

A. Consultant hereby warrants that it is qualified to assume the responsibilities and render the services described herein and has all requisite corporate authority and professional licenses in good standing, required by law.

B. The work performed by Consultant shall be in accordance with generally accepted professional practices and the level of competency presently maintained by other practicing professional firms in the same or similar type of work in the applicable community.

C. Consultant shall be responsible for the professional quality, technical accuracy, timely completion, and the coordination of all designs, drawings, specifications, reports, and other services furnished by Consultant under this Agreement. Consultant shall, without additional compensation, correct or resolve any errors or deficiencies in his designs, drawings, specifications, reports, and other services, which fall below the standard of professional practice, and reimburse the Town for construction costs caused by errors and omissions which fall below the standard of professional practice.

D. Approval by the Town of drawings, designs, specifications, reports, and incidental work or materials furnished hereunder shall not in any way relieve Consultant of responsibility for technical adequacy of the work. Neither the Town's review, approval or acceptance of, nor payment for, any of the services shall be construed as a waiver of any rights under this Agreement or of any cause of action arising out of the performance of this Agreement, and Consultant shall be and remain liable in accordance with applicable performance of any of the services furnished under this Agreement.

E. The rights and remedies of the Town provided for under this Agreement are in addition to any other rights and remedies provided by law.

VIII. COMPLIANCE WITH LAW

The work and services to be performed by Consultant hereunder shall be done in compliance with applicable laws, ordinances, rules, and regulations.

IX. INDEMNIFICATION

A. INDEMNIFICATION – GENERAL: The Town cannot and by this Agreement does not agree to indemnify, hold harmless, exonerate or assume the defense of the Consultant or any other person or entity whatsoever, for any purpose whatsoever. Provided that the claims, demands, suits, actions or proceedings of any kind are not the result of professional negligence, the Consultant, to the fullest extent permitted by law, shall defend, indemnify and hold harmless the Town, its Board members, officials, officers, directors, agents and employees from any and all claims, demands, suits, actions or proceedings of any kind or nature whatsoever, including worker's compensation claims, in any way resulting from or arising from the services rendered by Consultant, its employees, agents or subconsultants, or others for whom the Consultant is legally liable, under this Agreement; provided, however, that the Consultant need not indemnify or save harmless the Town, its Board members, its officers, agents and employees from damages resulting from the negligence of the Board members, officials, officers, directors, agents and employees.

B. INDEMNIFICATION FOR PROFESSIONAL NEGLIGENCE: The Consultant shall, to the fullest extent permitted by law, defend, indemnify and hold harmless the Town, its Board members, and any of its officials, officers, directors, and employees from and against damages, liability, losses, costs and expenses, including reasonable attorneys' fees, but only to the extent caused by or arising out of the negligent acts, errors or omissions of the Consultant, its employees, agents or subconsultants, or others for whom the Consultant is legally liable, in the performance of professional services under this Agreement. The Consultant is not obligated under this subparagraph IX.B. to indemnify the Town for the negligent acts of the Town, its Board members, or any of its officials, officers, directors, agents, and employees.

DRAFT

C. INDEMNIFICATION – COSTS: Consultant shall, to the fullest extent permitted by law, defend, investigate, handle, respond to, and provide defense for and defend against, any such liability, claims or demands at the sole expense of Consultant or, at the option of the Town, agrees to pay the Town or reimburse the Town for the defense costs incurred by the Town in connection with any such liability, claims or demands. Consultants shall, to the fullest extent permitted by law, defend and bear all other costs and expenses related thereto, including court costs and attorney fees, whether or not any such liability, claims or demands alleged are groundless, false, or fraudulent. If it is determined by the final judgment of a court of any competent jurisdiction that such injury, loss or damage was caused in whole or in part by the act, omission or other fault of the Town, its Board members, officials, officers, directors, agents and employees, the Town shall reimburse Consultant for the portion of the judgment attributable to such act, omission or other fault of the Town, its Board members, officials, officers, directors, agents and employees.

D. To the extent this Agreement is subject to C.R.S. § 13-50.5-102(8), Contractor's liability under this provision shall be to the fullest extent of, but shall not exceed, that amount represented by the degree or percentage of negligence or fault attributable to Contractor, any subcontractor of Contractor, or any officer, employee, representative, or agent of Contractor or of any subcontractor of Contractor. If Contractor is providing architectural, engineering, surveying or other design services under this Agreement, the extent of Contractor's obligation to defend, indemnify and hold harmless the Town may be determined only after Contractor's liability or fault has been determined by adjudication, alternative dispute resolution or otherwise resolved by mutual agreement of the Parties, as provided by C.R.S. § 13-50.5-102(8)(c).

X. INSURANCE

A. Consultant agrees to procure and maintain, at its own cost, a policy, or policies of insurance sufficient to insure against all liability, claims, demands, and other obligations assumed by Consultant pursuant to paragraph A. above. Such insurance shall be in addition to any other insurance requirements imposed by this Agreement or by law. Consultant shall not be relieved of any liability, claims, demands, or other obligations assumed pursuant to Section IX. Indemnification, above, by reason of its failure to procure or maintain insurance, or by reason of its failure to procure or maintain insurance in sufficient amounts, durations, or types.

B. Consultant shall procure and maintain and shall cause any subconsultant of Consultant to procure and maintain, the minimum insurance coverages listed below. Such coverages shall be procured and maintained with forms and insurers acceptable to the Town. All coverages shall be continuously maintained to cover all liability, claims, demands, and other obligations assumed by Consultant pursuant to Section IX. Indemnification, above. In the case of any claims-made policy, the necessary retroactive dates and extended reporting periods shall be procured to maintain such continuous coverage.

1. Workmen's compensation insurance to cover obligations imposed by applicable laws for any employee engaged in the performance of work under this Agreement, and Employer's Liability insurance with minimum limits of five hundred thousand dollars ($500,000) each accident, one million dollars ($1,000,000) disease - policy limit, and one million dollars ($1,000,000) disease - each employee. Evidence of qualified self-insured status may be substituted for the workmen's compensation requirements of this paragraph.

2. Commercial general liability insurance with minimum combined single limits of one million dollars ($1,000,000) each occurrence and two million dollars ($2,000,000) general aggregate. The policy shall be applicable to all premises and operations. The policy shall include coverage for bodily injury, broad form property damage (including completed operations), personal injury (including coverage for contractual and employee acts), blanket contractual, products, and completed operations. The policy shall contain a severability of interests provision.

3. Professional liability insurance with minimum limits of one million dollars ($1,000,000) each claim and two million dollars ($2,000,000) general aggregate.

4. The policy required by paragraph 2. above shall be endorsed to include the Town and the Town's officers, employees, and consultants as additional insureds. Every policy required above shall be primary insurance, and any insurance carried by the Town, its officers, its employees, or its consultants shall be excess and not contributory insurance to that provided by Consultant. No additional insured endorsement to the policy required by paragraph 1. above shall contain any exclusion for bodily injury or property damage arising from completed operations. Consultant shall be solely responsible for any deductible losses under any policy required above.

5. The certificate of insurance provided for the Town shall be completed by Consultant's insurance agent as evidence that policies providing the required coverages, conditions, and minimum limits are in full force and effect, and shall be reviewed and approved by the Town prior to commencement of the Agreement. No other form of certificate shall be used. The certificate shall identify this Agreement and shall provide that the coverages afforded under the policies shall not be cancelled, terminated, or materially changed until at least thirty (30) days prior written notice has been given to the Town. The completed certificate of insurance shall be sent to:

Town of Elizabeth
Box 159
151 S. Banner Street
Elizabeth, Colorado 80107

6. Failure on the part of Consultant to procure or maintain policies providing the required coverages, conditions, and minimum limits shall constitute a material breach of agreement upon which the Town may immediately terminate this Agreement, or at its discretion, the Town may procure or renew any such policy or any extended reporting period thereto and may pay any and all premiums in connection therewith, and all monies so paid by the Town shall be repaid by Consultant to the Town upon demand, or the Town may offset the cost of the premiums against any monies due to Consultant from the Town.

7. The Town reserves the right to request and receive a certified copy of any policy and any endorsement thereto.

8. The parties hereto understand and agree that the Town, its officers, and its employees, are relying on, and do not waive or intend to waive by any provision of this Agreement, the monetary limitations or any other rights, immunities, and protections provided by the Colorado Governmental Immunity Act, Colo. Rev. Stat. §24-10-101 et seq., 10 Colo. Rev. Stat., as from time to time amended, or otherwise available to the Town, its officers, or its employees.

XI. NON-ASSIGNABILITY

Neither this Agreement, nor any of the rights or obligations of the parties hereto, shall be assigned by either party without the written consent of the other.

XII. TERMINATION

This Agreement shall terminate at such time as the work in Section I is completed and the requirements of this Agreement are satisfied, or upon the Town's providing Consultant with seven (7) days advance written notice, whichever occurs first. In the event the Agreement is terminated by the Town's issuance of said written notice of intent to terminate, the Town shall pay Consultant for all work previously authorized and completed prior to the date of termination. If, however, Consultant has substantially or materially breached the standards and terms of this Agreement, the Town shall have any remedy or right of set-off available at law and equity. If the Agreement is terminated for any reason other than cause prior to completion of the Project, any

use of documents by the Town thereafter shall be at the Town's sole risk, unless otherwise consented to by Consultant.

XIII. CONFLICT OF INTEREST

The Consultant shall disclose any personal or private interest related to property or business within the Town. Upon disclosure of any such personal or private interest, the Town shall determine if the interest constitutes a conflict of interest. If the Town determines that a conflict of interest exists, the Town may treat such conflict of interest as a default and terminate this Agreement.

XIV. VENUE

This Agreement shall be governed by the laws of the State of Colorado, and any legal action concerning the provisions hereof shall be brought in the County of Elbert, State of Colorado.

XV. INDEPENDENT CONTRACTOR

Consultant is an independent contractor. Notwithstanding any provision appearing in this Agreement, all personnel assigned by Consultant to perform work under the terms of this Agreement shall be, and remain at all times, employees, or agents of Consultant for all purposes. Consultant shall make no representation that it is the employee of the Town for any purposes.

XVI. NO WAIVER

Delays in enforcement or the waiver of any one or more defaults or breaches of this Agreement by the Town shall not constitute a waiver of any of the other terms or obligation of this Agreement.

XVII. ENTIRE AGREEMENT

This Agreement and the attached Exhibits A and B is the entire Agreement between Consultant and the Town, superseding all prior oral or written communications. None of the provisions of this Agreement may be amended, modified, or changed, except as specified herein.

XVIII. NOTICE

Any notice or communication between Consultant and the Town which may be required, or which may be given, under the terms of this Agreement shall be in writing, and shall be deemed to have been sufficiently given when directly presented or sent pre-paid, first-class United States Mail, addressed as follows:

The Town: Town of Elizabeth
151 S. Banner Street
Box 159
Elizabeth, Colorado 80107

Consultant: _____
_____
_____

IN WITNESS WHEREOF, the parties hereto each herewith subscribe the same in triplicate.

TOWN OF ELIZABETH, COLORADO

By: _____
Angela Ternus, Mayor

ATTEST:

_____
Michelle M. Oeser, Town Clerk

CONSULTANT

By: _____

_____
Title Date

ATTEST:

_____

_____
Title Date

DRAFT

REQUEST FOR PROPOSALS
Compensation Study and Pay Equity Analysis

Issued: May 16, 2025

DEADLINE FOR PROPOSALS:
June 16, 2025
5:00 P.M. Local Time

GENERAL INFORMATION

The Town of Elizabeth (the "Town") is seeking proposals from qualified consultants to provide a biannual compensation study and pay equity analysis for 2025, with implementation beginning January 1, 2026. This study builds on the existing compensation structure of the Town and is considered an update. The ideal consultant will have experience working with public sector entities and familiarity with the Colorado labor market. The selected consultant may be awarded the next two studies in 2028 and 2030.

SUBMITTAL REQUIREMENTS

Proposals may be submitted in a single PDF file no larger than 30 MB and emailed to hbruce@townofelizabeth.org. If electing to submit hard copy proposals instead, deliver one (1) hard copy and one (1) digital copy to the Town of Elizabeth, Attn: Hannah Bruce, Finance Officer, 151 South Banner Street, Elizabeth, Colorado 80107, or mail to P.O. Box 159, Elizabeth, CO 80107. Please allow additional time if mailing proposals.

If necessary, interpretation of, or changes to, this RFP will be made by written addendum. All questions must be submitted in writing via email to Patrick Davidson, Town Administrator at pdavidson@townofelizabeth.org. no later than 3:00 P.M., Tuesday, June 10, 2025. Questions received after this deadline will not be answered.

RFP SCHEDULE

RFP Released:	May 16, 2025
Final Day for Written Questions:	June 10, 2025
Town Response to Questions:	June 13, 2025
Proposals Due:	June 16, 2025
Interviews (if deemed necessary):	Week of June 23, 2025
Award:	July 8, 2025 (anticipated)

ABOUT THE TOWN

The Town of Elizabeth, incorporated in 1890, operates under a Council-Manager form of government, and is a Statutory Town. With a population of approximately 3,300 Elizabeth is a small community situated in Elbert County. The Town continues to see residential and commercial growth, with an anticipated population of over 5,000 by 2028.

The Town provides the following services: police, municipal court, code enforcement, public works, planning and zoning, building services, general governmental services, parks management, water, and wastewater. The Town currently employs twenty-eight (28) staff members and is currently considered "fully staffed" except for a Community Development Director. Additional positions in public safety and public works are anticipated over the next several years.

The Town's staffing is strongly influenced by the nearby communities of Castle Rock, Parker, Aurora, Centennial, and the Denver Tech Center. Labor in the area is considered fluid with a considerable amount of turnover within the Town's organization to obtain similar or equivalent positions in nearby communities which offer higher pay and benefits.

SCOPE OF WORK

The Town of Elizabeth has a current pay grade structure and has previously evaluated the placement of existing jobs within reference positions. Through hiring practices, adjustments to compensation, and merit increases, it is anticipated that some positions may fall outside the current grade structure. The scope of this project is to define up to ten (10) new positions and review market shifts for the existing twenty-eight (28) positions.

A pay equity analysis will be conducted to determine and document compliance with Colorado's Equal Pay for Equal Work Act and any other applicable guidelines. This will identify any potential inequities and research and identify any valid differences based on legal compensable factors. The consultant may recommend broader organizational policies or procedure changes if needed to ensure ongoing compliance. The consultant will evaluate all current staff members at the time the reports are pulled for the analysis.

The consultant will prepare a written report outlining the market findings and resulting recommendations. This report will be made available to the Elizabeth Board of Trustees, in writing, and will be presented in person to the Board of Trustees at a mutually agreeable time. The consultant will work with the Finance Officer, Town Clerk, and Town Administrator as necessary to complete all aspects of the study and analysis.

REPORTING REQUIREMENTS

Following the completion of the study, the consultant shall issue:

1. All data used to define the market, analyze the market, determine job placement within the pay structure, and general recommendations for employee placement. This is to be provided in a Microsoft Excel workbook.

2. A letter to management containing comments on method, scope, findings, recommendations, and any other comments deemed pertinent by the consultant regarding the completion of the study, recommended pay ranges, market competition, peer organizations, and any other material matters.

3. The consultant shall formally present the study and its findings to the Elizabeth Board of Trustees on the night the Board of Trustees accepts the study report and at any other meetings with Council as may be necessary. The scope of pricing shall include one (1) on-site visit for the formal presentation to the Board of Trustees.

4. A pay equity analysis document is to be retained by the Town for compliance with the Act. This document shall include any findings and recommendations for remediation if required.

GENERAL REQUIREMENTS

- Incurring Cost: There is no expressed or implied obligation for the Town of Elizabeth to reimburse responding firms for any expenses incurred in preparing proposals in response to this request.

- Amended Proposals: A Firm may amend their submitted Proposal before the deadline for submission. An amended Proposal must be a complete replacement for a previous submittal and must be clearly identified as such in the transmittal letter.

- Firm's Rights to Withdraw Proposal: Firms may withdraw their Proposal at any time.

- Period of Offer: Responses to this RFP, including the rate schedule, will be considered for a minimum of ninety (90) days after the due date for the Proposals.

- Disclosure of Submittal Contents: Proposals will be kept confidential until a contract is awarded. Once awarded, all proposals and documents pertaining to all Proposals will be open to the public, except any financial information that is marked **CONFIDENTIAL**.

- Terms and Conditions: Firms must include with their Proposals a complete set of any additional terms and conditions, which they expect to have included in a contract negotiated with the Town.

- Contract Deviation: Any additional terms and conditions which may be the subject of negotiation, will be discussed only between the Town and the selected Firm and shall not be deemed an opportunity to amend the Firm's submittal.

- Qualifications: The Town may make such investigations as necessary to determine the ability of the Firm to adhere to the requirements specified within this RFP.

- Right to Waive Minor Irregularities: The Town reserves the right to waive minor Proposal irregularities.

ASSISTANCE TO BE PROVIDED TO THE CONSULTANT

The Town of Elizabeth does not maintain a separate Human Resources Department; however, all employment records and files are maintained by the Town Clerk. In addition, the traditional roles supported by a Human Resources Department are supported by the Finance Officer and the Town Administrator. All three (3) personnel will be available during the study and analysis to assist the

firm in providing information, documentation, budget, and explanations. The consultant will work collaboratively with these Staff members to achieve the objects of the Town.

REPORT PREPARATION:
The consultant shall provide all recommendations, revisions and suggestions for improvement to the Finance Officer. A report, including a draft final summary report(s) shall be delivered to the Finance Officer, preferably by October 1, 2025.

The Town Administrator will complete their review of the draft report as expeditiously as possible. During that period, the consultant should be available for any meetings that may be necessary to discuss the reports. Once all issues for discussion are resolved, the final signed report shall be delivered to the Finance Officer within five (5) working days.

PROPOSAL REQUIREMENTS
Proposals should be submitted to the following address:

Emailed to: hbruce@townofelizabeth.org

If electing to submit hard copy proposals instead, deliver one (1) hard copy and one (1) digital copy to:

Town of Elizabeth
Attn: Finance Officer Hannah Bruce
151 South Banner Street
P.O. Box 159
Elizabeth, Colorado 80107

A. PROPOSAL REQUIREMENTS
The purpose of the Technical Proposal is to demonstrate the qualifications, competence and capacity of the firms seeking to undertake a compensation study and equity analysis of the Town of Elizabeth in conformity with the requirements of this request for proposals. As such, the substance of proposals will carry more weight than their form or manner of presentation. The Technical Proposal should demonstrate the qualifications of the firm and of the staff to be assigned to this engagement. It should also specify an approach that will meet the request for proposals requirements.

The Technical Proposal should address all the points outlined in the request for proposals (excluding any cost information which should only be included in the sealed cost proposal). The Proposal should be prepared simply and economically, providing a straightforward, concise description of the firm's capabilities to satisfy the requirements of the request for proposal. While additional data may be presented, the following items must be included, as they represent the criteria against which the proposal will be evaluated.

1. Independence. The firm should provide an affirmative statement that it is independent of the Town of Elizabeth and any of its employees as defined by applicable standards. In addition, the firm shall give the Town of Elizabeth written notice of any professional relationships entered into during the period of their engagement that may affect their independence from the Town.

2. Firm Qualifications and Experience. The firm should state the size of the firm, the location of the office from which the work on this engagement is to be performed and the number and nature of the staff to be employed on this project. If the firm uses subcontractors, the qualifications of each subcontractor should be separately identified and portion of the audit work that will be subcontracted should be identified, if applicable.

If the firm is a joint venture or consortium, the qualifications of each firm comprising the joint venture or consortium should be separately identified and the firm that is to serve, as the principal auditor, should be noted, if applicable.

If selected, the firm shall provide proof of workers' compensation insurance as well as proof of professional liability (errors & omissions) insurance of at least one million dollars ($1,000,000) of coverage.

3. Partner, Supervisory and Staff Qualifications and Experience. Identify the principal supervisory and management staff, including engagement partners, managers, other supervisors and specialists, who would be assigned to the engagement. Study personnel may be changed at the discretion of the firm, provided replacements have substantially the same or better qualifications or experience than the personnel they are replacing.

4. Prior Engagements with the Town of Elizabeth. List separately all engagements within the last five (5) years with the Town of Elizabeth.

5. Similar Engagements with Other Government Entities. List engagements performed in the last five (5) years which are like the engagement described in this request for proposal.

6. Specific Methodology. The proposal shall include a work plan, including an explanation of the study and analysis methodology to be followed, to perform the services required in this request for proposal. In developing the work plan, reference should be made to sources of information for market analysis.

Firms will be required to provide the following information on their approach:

a. Proposed segmentation of the engagement (The Town's preference is for work commencing in July 2025). Substantial completion required by October 1, 2025.

b. Level of staff and number of hours to be assigned to each proposed segment of the engagement.

c. Approach to be taken to gain and document an understanding of the Town of Elizabeth's pay philosophy.

d. The firm's preferred approach to determining a defined market (this will be finalized at the discretion of the Town).

e. The methodology used to compare positions to the defined market.

B. COST PROPOSAL

The cost proposal should contain all pricing information related to performing the study and analysis as described in this request for proposal. The total all-inclusive maximum price to be bid on is to contain all direct and indirect costs including all out-of-pocket expenses.

The Town of Elizabeth will not be responsible for expenses incurred in preparing and submitting the technical proposal or the cost proposal. Such costs should not be included in the proposal. The cost proposal should include the following information:

a. The name of the firm.

b. Certification that the person signing the proposal is entitled to represent the firm, empowered to submit the bid, and authorized to sign a contract with the Town of Elizabeth.

c. Schedule of professional fees and expenses if there are any possible additional charges.

d. Manner of payment, including requirement for progress payments.

C. EVALUATION PROCEDURES

Evaluation of proposals will be done in accordance with the criteria and procedure defined herein. The following parameters will be used to evaluate the submittals (with weighted values): The rating scale shall be from 1 to 5 with 1 being a poor rating, 3 being an average

Evaluation Criteria

Weighting Values	Qualification	Standard
30%	Scope of Proposal	Does the proposal address all elements of the RFP? Does the proposal show an understanding of the project objectives, methodology to be used and results/outcomes required by the project?

30%	Firm Capability & Reputation	Does the firm have the resources, financial strength, capacity and support capabilities required to complete the study and analysis? Has the firm successfully completed previous work of this type and scope? Are sufficient people of the requisite skills and qualifications assigned to the project?
20%	Cost	Does the cost compare favorably with the Project Manager's estimate and other proposals?
20%	Schedule	Are there any exceptions to the schedule outlined for completion of phases of the work to be performed?

Review of Proposals

The Selection Committee, which will be made up of members of Town Staff, will review and evaluate the proposals. The Selection Committee will rank each proposal based on the **Evaluation Criteria** listed above.

The Town of Elizabeth reserves the right to retain all proposals submitted and use any idea in a proposal regardless of whether that proposal is selected. During the evaluation process the Town of Elizabeth reserves the right, where it may serve the Town of Elizabeth's best interest, to request additional information or clarifications from the firms, or to allow corrections of errors or omissions. During the evaluation process, the Town may, at its discretion, request that eligible firms make oral presentations. Such presentations will provide firms with an opportunity to answer any questions the Town may have regarding a firm's proposal. Not all firms may be asked to make such oral presentations.

FINAL SELECTION

It is anticipated that a firm will be selected by the Board of Trustees on or about July 8, 2025. Following notification of the firm selected, it is expected that a contract will be executed between both parties on or about July 9, 2025. (A draft of the proposed *Professional Services Agreement* is attached hereto as **Exhibit A**.)

RIGHT TO REJECT PROPOSALS

Submission of a proposal indicates acceptance by the firm of the conditions contained in this request for proposal unless clearly and specifically noted in the proposal submitted and confirmed in the contract between the Town of Elizabeth and the firm selected. The Town of Elizabeth reserves the right to reject any or all proposals.

TO: Honorable Mayor, Mayor Pro Tem, and Board of Trustees
FROM: Patrick Davidson, Town Administrator
DATED: May 13, 2025
SUBJECT: Fuel Island Agreement with Elizabeth School District and the Elizabeth Fire Protection District

---

BACKGROUND
The Elizabeth School District purchases its fuel through the State of Colorado for delivery to its pumps in Elizabeth. The School District purchases both unleaded gasoline as well as diesel fuel. Their storage tanks are of sufficient size that they can monitor and adjust purchases to reflect small changes in prices, as well as to ensure adequate quantities are available for their operations.

Last year, the Elizabeth School District reached out to the Town of Elizabeth to determine if we were interested in participating in their program to purchase fuel. A similar discussion was also had with the Elizabeth Fire Protection District. The benefits for both the Town and for the Fire District revolve around the discounted price of fuel. In addition, in terms of the Town, it would allow the Town to make payments for fuel directly to the School District and to avoid the current process of seeking reimbursement of fuel taxes from the State for fuel bought at local merchants.

An Intergovernmental Agreement was prepared by the Town's Attorney and was then circulated to the Elizabeth School District and the Elizabeth Fire Protection District for their review and approval. We have now received the final copy, signed by both Districts for final action by the Board of Trustees.

ANALYSIS
This is an overall cost cutting measure for the Town of Elizabeth. Early in the discussions it appeared that the Elizabeth School District was able to purchase fuel at a cost savings over the prices paid by the Town at retail pumps around Town. While the prices varied, it appeared that the price was consistently between $0.25 to $1.10 less per gallon for the School District than what was being encountered at the local gas stations in the community.

Under the agreement, the Town will be issued key fobs for use with fleet vehicles. An employee will enter a user number and code into the computer system, along with the fob, which will then grant access to fill the vehicle or fuel container. Additional security features are in place to ensure that the fuel is obtained for legitimate Town purposes. The School District will then generate a monthly report identifying the employee, the vehicle, and confirming the amount of fuel obtained during the prior month. This report is then sent to the Town's Finance Manager for

reconciliation and payment. No additional work is required by the Town to obtain a refund of fuel taxes paid to third parties.

To assist the School District in the transition to its system, the Town of Elizabeth has approved a total of $20,000 within the 2025 budget, and the Elizabeth Fire Protection District approved a total of $10,000 through its budget. Further, a separate line-item charge is assessed to offset the administrative and supply costs encountered in the Agreement. Lastly, a reserve fund is established to assist with long-term maintenance and other costs that may arise. Once the reserve fund has reached $100,000, the mark-up will cease.

The Town has provided the requisite documentation of tax-exempt status, a list of vehicles and employees, and other documents required to implement the program. The only item remaining for all parties is the approval of the Board of Trustees.

STAFF RECOMMENDATION
Staff recommend the approval of the Intergovernmental Agreement.

BUDGET CONSIDERATIONS
The initial payment identified in the Intergovernmental Agreement, in the amount of $20,000, is budgeted in the 2025 Budget. Cost savings will vary based on overall fuel prices, but it is anticipated that there are no other budget considerations for the foreseeable future.

ATTACHMENTS
A Resolution Authorizing The Town Administrator To Execute An Intergovernmental Agreement Between The Town Of Elizabeth, The Elizabeth School District, And The Elizabeth Fire Protection District For A Fuel Facility.

Intergovernmental Agreement

RESOLUTION 25R19

A RESOLUTION AUTHORIZING THE TOWN ADMINISTRATOR TO EXECUTE AN INTERGOVERNMENTAL AGREEMENT BETWEEN THE TOWN OF ELIZABETH, THE ELIZABETH SCHOOL DISTRICT, AND THE ELIZABETH FIRE PROTECTION DISTRICT FOR A FUEL FACILITY.

WHEREAS, the Town of Elizabeth, the Elizabeth School District, and the Elizabeth Fire Protection District seek to enter into a mutually beneficial agreement for the operation of a Fuel Facility; and

WHEREAS, the parties have negotiated an agreement which addresses all issues and concerns related to the establishment of a jointly beneficial Fuel Facility; and

WHEREAS, the prepared document has been executed by the Elizabeth School District and the Elizabeth Fire Protection District and is awaiting final approval by the Board of Trustees.

NOW THEREFORE BE IT RESOLVED BY THE BOARD OF TRUSTEES OF THE TOWN OF ELIZABETH, COLORADO AS FOLLOWS:

SECTION 1. The Board of Trustees hereby authorizes the Town Administrator to execute the Intergovernmental Agreement attached hereto as **Exhibit A**.

PASSED, APPROVED, and ADOPTED this 13th day of May 2024, by the Board of Trustees of the Town of Elizabeth, Colorado, on first and final reading, by a vote of _____ for and _____ against.

_____
Angela Ternus, Mayor

ATTEST:

_____
Michelle M. Oeser, Town Clerk

INTERGOVERNMENTAL AGREEMENT

THIS INTERGOVERNMENTAL AGREEMENT ("Agreement") is made and entered into this 1st day of May 2025 (the "Effective Date"), by and between the TOWN OF ELIZABETH, a Colorado municipal corporation (the "Town"); the ELIZABETH FIRE PROTECTION DISTRICT, a Colorado special district (the "Fire District") and the ELIZABETH SCHOOL DISTRICT (the "School District"), (each a "Party" and collectively, the "Parties").

RECITALS

WHEREAS, the School District owns a fuel filling facility (the "Fueling Facility") that it supplies with gasoline and diesel fuel that it purchases from the State;

WHEREAS, the Town and the Fire District desire to pay to access and use the School District's Fueling Facility to fuel their vehicles;

WHEREAS, C.R.S. § 29-1-203 authorizes the Town, the Fire District, and the School District to cooperate and contract together regarding functions and services each is authorized to provide; and

WHEREAS, the School District desires to allow the Town and the Fire District to access and use the Fueling Facility in exchange for the mutual promises included herein and warrants and represents that it may do so under any requirements of or agreements with the State.

NOW THEREFORE, after incorporating the recitals above, and in consideration of the compensation specified herein, the premises, the mutual promises of the Parties, and the mutual benefits to be gained by performance, it is agreed as follows:

TERMS

Section 1. School District Obligations.

a. The School District shall allow the Town and the Fire District unlimited, 24-hour access, 365 days a year, to its Fueling Facility to allow the Town and the Fire District to fuel their vehicles.

b. The School District shall maintain the Fueling Facility and all related equipment and components in good working condition and in accordance with local and state requirements, and shall maintain adequate supplies of gasoline and diesel fuel in its pumps for use of the Town and Fire District .

c. The School District shall use best efforts to time its purchase of gasoline and diesel fuel from the State to minimize costs to the Parties.

d. The School District shall separately invoice the Town and the Fire District monthly for the cost of the fuel provided to both entities. The Parties will determine by mutual agreement how the District will track and record fuel usage. The School District shall add as a separate line item on the invoice an additional 5% markup to actual costs billed to cover administration of the program and cost of supplies.

e. The School District shall charge as a separate line item on the invoice an additional 5% markup to actual costs billed and set it aside in a reserve fund for any future maintenance and repairs to the shared fueling facility. The School District will also contribute to the reserve fund. All parties shall contribute until a total of one hundred thousand dollars ($100,000.00) has been contributed toward the reserve fund, at which time the additional 5% markup for the reserve fund shall cease. The School District will provide reporting/tracking information to the Town and the Fire District about contributions toward and the balance in the reserve fund (a) any time reserve funds are utilized, (b) on an annual basis, and (c) upon request of the Town or Fire District.

f. The School District shall allow camera access through the School District Security Department within two (2) business days of a request and shall maintain a minimum of ninety (90) days of camera footage for review by the Parties.

g. If the School District has reason to believe an employee or an authorized agent of another Party is using the Fueling Facility for personal use, then the School District shall promptly notify the other Parties so that the appropriate Party may, in its sole discretion, investigate and address the issue

Section 2. Town Obligations.

a. Within 60 days of the Effective Date, the Town shall pay to the School District a total of twenty thousand dollars ($20,000.00) for the School District to promptly upgrade and update the Fueling Facility and its related hardware and software components to include the future addition of a generator and surveillance camera, which then will be owned by the School District.

b. The Town shall , as reasonably needed, cooperate and work with the School District in securing grants to pay for continued upgrades at the Fueling Facility.

c. The Town shall pay the School District's invoices for the cost of fuel used within thirty (30) days of receipt of the same.

d. The Town shall provide an up to date employee and vehicle list to the School District's Transportation Director. Any change to the employee and/or vehicle list shall be updated with the School District within a reasonable time to ensure that the Town's former employees no longer have access to the Fueling Facility or fuel. If the Town has reason to believe an employee or an authorized agent of another Party is using the Fueling

Facility for personal use, then the Town shall promptly notify the other Parties so that the appropriate Party may, in its sole discretion, investigate and address the issue .

e. The Town shall provide documentation of tax exemption to the School District prior to utilizing the Fueling Facility.

Section 3. Fire District Obligations.

a. Within 60 days of the Effective Date, the Fire District shall pay the School District a total of ten thousand dollars ($10,000.00) for the School District to promptly upgrade and update the Fueling Facility and its related hardware and software components to include the future addition of a generator and surveillance camera, which then will be owned by the School District.

b. The Fire District shall, as reasonably needed, cooperate and work with the School District in securing grants to pay for continued upgrades at the Fueling Facility.

c. The Fire District shall pay the School District's invoices for the cost of fuel used within thirty (30) days of receipt of the same.

d. The Fire District shall provide an up to date employee and vehicle list to the School District's Transportation Director. Any change to the employee and/or vehicle list shall be updated with the School District within a reasonable time to ensure that the Fire District's former employees no longer have access to the Fueling Facility or fuel. If the Fire District has reason to believe an employee or an authorized agent of another Party is using the Fueling Facility for personal use, then the Fire District shall promptly notify the other Parties so that the appropriate Party may, in its sole discretion, investigate and address the issue.

e. The Fire District shall provide documentation of tax exemption to the School District prior to utilizing the Fueling Facility.

Section 4. Term and Termination.

a. This Agreement is effective as of the Effective Date through December 31, 2025, and may be automatically renewed as more fully set forth herein.

b. A Party may terminate this Agreement by giving the other parties sixty (60) days advance written notice. In addition, this Agreement shall renew automatically on January 1 of each year for year-long renewal periods without affirmative action of the parties unless any Party notifies the other Parties of their intention not to renew the Agreement. Any notice of non-renewal must be received on or before October 31 of the year preceding the year for which renewal would otherwise occur.

Section 5. Assignment. Neither this Agreement, nor any of a Parties' rights, obligations, duties, or authority hereunder, may be assigned in whole or in part.

Section 6. Relationship of Parties. This Agreement does not and shall not be construed as creating a relationship of joint venturers, partners, or employer-employee between any of the Parties referenced herein. The Parties enter into this Agreement as separate and independent entities and shall maintain such status throughout the term of this Agreement. Each Party's agents and employees are not, and shall not be deemed to be, agents or employees of the other Party for any purpose.

Section 7. Liability of Parties. No Party shall have any obligation whatsoever to repay any debt, financial obligation, or liability of any other Party, except where specified herein. Each Party shall be solely responsible for the actions and omissions of its employees, and authorized agents (collectively, "negligent acts"). No Party shall be responsible or legally liable for the negligent acts of the other Party. Nothing in this Agreement shall be construed as a waiver of the notice requirements, defenses, immunities, or limitations on liability that either Party may have under applicable state or federal law or this Agreement.

Section 8. Insurance. Each Party agrees to procure and maintain, at its own cost, a policy, or policies of insurance sufficient to insure against all liability, claims, demands, and other obligations assumed by it pursuant to this Agreement. Such policies shall include, at a minimum, comprehensive general liability, personal injury, and property damage with minimum combined single limits of not less than the amounts required by the Colorado Governmental Immunity Act, C.R.S. § 24-10-101, *et seq.* (the "Immunity Act"). The Parties further understand and agree that each Party and their officers and their employees are relying on, and do not waive or intend to waive by any provision of this Agreement, the monetary limitations or any other rights, immunities, and protections provided by the Immunity Act.

Section 9. Modification. Except as stated in Section 4(b), this Agreement may only be modified, amended, changed, or terminated, in whole or in part, by an agreement in writing duly authorized and executed by all Parties. No consent of any third party shall be required for the negotiation and execution of any such agreement.

Section 10. Waiver. The waiver of a breach of any provision of this Agreement by any Party shall not constitute a continuing waiver or a waiver of any subsequent breach of the same or another provision of this Agreement.

Section 11. Integration. This Agreement contains the entire agreement between the Parties and no statement, promise or inducement made by any Party or the agent of any Party that is not contained in this Agreement shall be valid or binding, except as noted in Section 1(d).

Section 12. Severability. Invalidation of any of the provisions of this Agreement or of any Section, paragraph, sentence, clause, phrase or work herein, or the application thereof in any given circumstance, shall not affect the validity of any other provision of this Agreement.

Section 13. Governing Law. This Agreement shall be governed and construed in accordance with the laws of the State of Colorado.

Section 14. No Multiple-Year Financial Obligation. Nothing herein shall be deemed or construed to create a debt or multiple fiscal year obligation within the meaning of Article X, Section 20 of the Colorado Constitution; provided, however, the Parties agree that they have appropriated sufficient funds to meet their respective obligations under this Agreement for the initial term through December 31, 2025.

Section 15. Headings for Convenience Only. The headings, captions and titles contained herein are for convenience and reference only and are not intended to enlarge or restrict the content thereof.

Section 16. No Third-Party Beneficiaries. The benefits and burdens of this Agreement shall inure solely to the Parties. There are no third-party beneficiaries of this Agreement.

Section 17. Notice. All notice required under this Agreement shall be in writing and shall be hand-delivered or sent by registered or certified mail, return receipt requested, postage prepaid, to the addresses of the Parties as set forth herein. All notices so given shall be considered effective 72 hours after deposit in the United States first-class mail with the proper address as set forth herein. Any Party by notice so given may change the address to which future notices shall be sent.

Notice to the Town:	Attn: Patrick Davidson Town of Elizabeth P.O. Box 159 Elizabeth, Colorado 80107
With copy to:	Corey Y. Hoffmann, Esq. Hoffmann, Parker, Wilson & Carberry, P.C. 510 16th Street, Suite 610 Denver, Colorado 80202
Notice to the School District:	Attn: Business Office Elizabeth School District PO Box 610 Elizabeth, Colorado 80107
Notice to the Fire District:	Attn: TJ Steck, Fire Chief Elizabeth Fire Protection District P.O. Box 441 Elizabeth, Colorado 80107

Section 18. Disputes. The Parties agree to exercise good faith and fair dealing in implementing and adhering to the provisions of this Agreement, as well as during any dispute resolution. Should the Parties not agree on any matter arising out of or related to this Agreement, then the Parties shall use best efforts to meet and shall endeavor to resolve their disagreement informally. Should the Parties, despite best efforts, be unable to reach agreement, then each Party shall bear its own legal fees and costs incurred with respect to any court proceeding, arbitration, or mediation.

Section 19. Execution. This Agreement may be executed by original, scanned, or facsimile counterpart signatures and shall have the same force and effect as if all signatures appeared on the same original.

********** Intentionally Left Blank **********

IN WITNESS WHEREOF, the Parties hereto have executed this Agreement, effective as of the day and year first above written.

TOWN OF ELIZABETH

By:_____
Patrick Davidson, Town Administrator

ATTEST:

_____
Michelle Oeser, Town Clerk

ELIZABETH SCHOOL DISTRICT

By:_____
Dan Snowberger, Superintendent

ATTEST:

_____
Jaimee Glazebrook, Board Clerk

ELIZABETH FIRE PROTECTION DISTRICT

By:_____
TJ Steck, Fire Chief

ATTEST:

_____
Taylor Clark, HR Generalist - Executive Assistant

TOWN OF ELIZABETH

PATRICK G. DAVIDSON, TOWN ADMINISTRATOR

To: Board of Trustees
From: Patrick Davidson, Town Administrator
Alexandra Cramer, Planner/Project Manager
Date: May 13th, 2025
Subject: Extension Request – Banner Street Paired Homes Site Development Agreement

Background
On November 7, 2024, the Board of Trustees approved the Site Development Agreement (SDA) for the Banner Street Paired Homes project. Per the terms of the agreement, the project owner was required to provide a letter of credit within 90 days of approval.

Analysis
The project owner has informed staff that they have been unable to secure the required letter of credit within the specified 90-day timeframe. The owner has requested an extension of a year from the original approval date to fulfill this requirement. No other changes to the conditions or requirements of the Site Development Agreement are being proposed.

It is important to note that this extension for providing the letter of credit does not affect any other deadlines established in the Site Development Agreement. Specifically, the December 10, 2027 deadline for completion of all Public Improvements, as set forth in paragraph 7 of the SDA, remains unchanged. The Developer is still required to complete all Public Improvements and related inspections by this date, regardless of when the letter of credit is provided.

Summary
The requested amendment would extend only the deadline for submitting the letter of credit. All other provisions of the Site Development Agreement, including the December 10, 2027 completion date for all public improvements, would remain unchanged and in full effect.

Staff Recommendation
Staff recommends the Board of Trustees approve the requested extension for providing the letter of credit, extending the deadline to November 7, 2025 (one-year from the November 7, 2024 approval).

Budget Considerations
There are no budget impacts associated with this extension request.

Attachments
1. Proposed Amended Site Development Agreement
2. Original Site Development Agreement dated November 7, 2024

▪ PO Box 159, 151 S. Banner Street ▪ Elizabeth, Colorado 80107 ▪ (303) 646-4166
▪ Fax: (303) 646-9434 ▪ www.townofelizabeth.org

RESOLUTION 25R20

A RESOLUTION AUTHORIZING THE MAYOR TO EXECUTE AN AMENDED SITE PLAN AGREEMENT REGARDING THE BANNER STREET PAIRED HOMES.

WHEREAS, on November 7, 2024, the Board of Trustees approved the Site Development Agreement (SDA) for the Banner Street Paired Homes Project; and

WHEREAS, the Project Owner was required to provide a Letter of Credit (LOC) within ninety (90) days of the approval of the Site Plan Agreement; and

WHEREAS, the Project Owner has requested an extension of time in which to provide the LOC, and is seeking one (1) year from the date of approval in which to provide the LOC; and

WHEREAS, the specific amendment and request of the Project Owner is merely to extend the date of the LOC and does not alter or amend the deadline of December 10, 2027, for the completion of the public improvements, the balance of the Site Plan Agreement remains in effect.

NOW THEREFORE BE IT RESOLVED BY THE BOARD OF TRUSTEES OF THE TOWN OF ELIZABETH, COLORADO AS FOLLOWS:

SECTION 1. The Board of Trustees hereby authorizes the Mayor to execute the Amended Site Plan Agreement , attached hereto as Exhibit A, regarding the Banner Street Paired Homes.

PASSED, APPROVED, and ADOPTED this 13 day of May 2025, by the Board of Trustees of the Town of Elizabeth, Colorado, on first and final reading, by a vote of _____ for and _____ against.

_____
Angela Ternus, Mayor

ATTEST:

_____
Michelle M. Oeser, Town Clerk

AMENDED SITE PLAN AGREEMENT

THIS AMENDED AGREEMENT is made this _____ day of _____, 20__, by and between the Town of Elizabeth, Colorado, a municipal corporation (the "Town"), and Banner Paired Homes LLC (the "Developer").

RECITALS:

A. The Developer is the owner of certain real property located in the Town of Elizabeth known as Banner Street Paired Homes, which is more particularly described in **Exhibit A**, attached hereto and incorporated herein (the "Property").

B. The Board of Trustees and the Planning Commission of the Town of Elizabeth held all necessary public hearings concerning the site plan for the Property in accordance with Article II of Chapter 16 of the Town of Elizabeth Municipal Code. A copy of the site plan is attached hereto as **Exhibit B** and incorporated herein.

C. The approvals cited above are contingent upon the express condition that all duties created by this Agreement are faithfully performed by the Developer.

D. The parties desire to amend the original Site Development Agreement approved on November 7, 2024, to extend the time period for the Developer to provide an irrevocable letter of credit from ninety (90) days to one-year from the execution of the original Agreement, making the new deadline November 7, 2025.

AGREEMENT

NOW, THEREFORE, for and in consideration of the mutual promises and covenants contained herein, the sufficiency of which are mutually acknowledged, the parties hereto agree as follows:

1. Purpose. The purpose of this Agreement is to set forth the terms, conditions and fees to be paid by the Developer, upon approval of the site plan for the Property. All conditions contained herein are in addition to any and all requirements of the Town of Elizabeth Subdivision Ordinance and Zoning Ordinance, any and all state statutes, and any other sections of the Elizabeth Municipal Code, and are not intended to supersede any requirements contained therein.

2. Fees. The following fees shall be paid to the Town by the Developer.

a. The Developer hereby agrees to pay the Town the actual cost to the Town for plan review, engineering review, hydrological and surveying review, prior to and during the development process, and for construction observation, inspection and materials testing during the construction process for public improvements, and for construction observation, inspection and materials testing and electronic deliverable review during the warranty period for public improvements, and for legal services (the "actual costs") rendered in connection with the review of the site plan of the Property, including related administrative fees not to exceed one hundred fifteen percent (115%) of the actual costs.

b. The Developer acknowledges and agrees that the Town, pursuant to this Agreement, shall be granted construction easement(s) that are reasonably sufficient to complete the public improvements.

3. Specific Conditions. The Developer hereby agrees to construct those public improvements and those landscaping improvements more particularly described in **Exhibit C**, attached hereto and incorporated herein by this reference, with a total estimated cost of Four Hundred Thousand, Two Hundred Fifty-Four Dollars and sixty-three cents ($400,254.63), consisting of public improvement costs in the amount of Three Hundred Eighty Thousand, Seven Hundred Twenty-Seven Dollars and sixty-three cents ($380,727.63) and landscaping improvement costs in the amount of Nineteen Thousand Five Hundred and Twenty-Seven Dollars $19,527.00.

4. Breach by the Developer; the Town's Remedies. In the event of a breach of any of the terms and conditions of this Agreement by the Developer, the Board of Trustees shall be notified immediately and the Town may take such action, as permitted and/or authorized by law, this Agreement or the ordinances as the Town deems necessary to protect the public health, safety and welfare; and to protect the citizens of the Town from hardship and undue risk. The remedies include, but are not limited to:

a. The refusal to issue any building permit or certificate of occupancy;

b. The revocation of any building permit previously issued under which construction directly related to such building permit has not commenced, except a building permit previously issued to a third party;

c. A demand that the security given for the completion of the public improvements be paid or honored; or

d. Any other remedy available at law.

Unless necessary to protect the immediate health, safety and welfare of the Town, or to protect the interest of the Town with regard to security given for the completion of the public improvements, the Town shall provide the Developer thirty (30) days' written notice of its intent to take any action under this paragraph, during which thirty-day period the Developer may cure the breach described in the notice and prevent further action by the Town.

5. Public Improvements and Warranty. All drainage structures, paved streets, including sidewalk, curb, gutter and slope easements, and necessary appurtenances, as shown on the site plan, landscape plans and the associated construction documents (the "Public Improvements"), as approved by the Director of Public Works of the Town, shall be installed and completed at the expense of the Developer and dedicated and/or conveyed to the Town. The Public Improvements required by this Agreement and shown on the site plan, as well as associated construction documents approved by the Director of Public Works of the Town and the costs of these Public Improvements, are set forth on **Exhibit C**, attached hereto and incorporated herein. All Public Improvements covered by this Agreement shall be made in accordance with the site plan and associated construction documents drawn according to regulations and construction standards for such improvements and approved by the Director of Public Works of the Town.

The Developer shall warrant any and all Public Improvements, which are conveyed to the Town, pursuant to this Agreement, for a period of two (2) years from the date the Town's Director of Public Works grants probationary acceptance of the Public Improvements, as approved by the Town. The warranty period shall extend to the date final acceptance is granted in writing by the Town's Director of Public Works. The Developer shall be responsible for scheduling the necessary inspections for probationary and final acceptance. Specifically, but not by way of limitation, the Developer shall warrant the following:

a. That the title conveyed shall be marketable and its transfer rightful;

b. Any and all facilities conveyed shall be free from any security interest or other lien or encumbrance; and

c. Any and all facilities so conveyed shall be in conformity with the Town's specifications and shall be free of defects in materials or workmanship for a period of two (2) years, as stated above, including, but not limited to, cracks, breakage, settling, or other deterioration of the Public Improvements, no matter the cause, for a period of two (2) years, as stated above.

The Town will accept for maintenance all Public Improvements after the warranty period has expired, provided all warranty work has been completed. The Town shall accept for snow removal purposes only all dedicated public streets after probationary acceptance has been granted in writing by the Director of Public Works. The Developer shall make all corrections necessary to bring the Public Improvements into conformity with the Town's specifications, prior to final acceptance.

6. Observation. The Town shall have the right to make reasonable engineering observations at the Developer's expense, as the Town may request. Observation, acquiescence in, or approval by any engineering inspector of the construction of physical facilities at any particular time shall not constitute the approval by the Town of any portion of the construction of such Public Improvements. Such approval shall be made by the Town only after completion of construction and in the manner hereinafter set forth.

7. Completion of Public Improvements. The obligations of the Developer provided for in paragraph 3 of this Agreement, including the inspections hereof, shall be performed on or before December 10, 2027, and proper application for acceptance of the Public Improvements shall be made on or before such date. Upon completion of construction by the Developer of such Public Improvements, the Town's Director of Public Works or his designee shall inspect the improvements and certify with specificity their conformity or lack thereof to the Town's specifications. The Developer shall make all corrections necessary to bring the improvements into conformity with the Town's specifications. Once approved by the Town's Director of Public Works, the Town shall accept said improvements upon conveyance, pursuant to paragraph 9; provided, however, the Town shall not be obligated to accept the Public Improvements until the actual costs described in paragraphs 2.a. and b. of this Agreement are paid in full by the Developer.

8. Related Costs – Public Improvements. The Developer shall provide all necessary engineering designs, surveys, field surveys and incidental services related to the construction of

the Public Improvements, at its sole cost and expense, including reproducible "as built" drawings certified accurate by a professional engineer registered in the State of Colorado.

9. Improvements to be the Property of the Town. All Public Improvements for roads, concrete curbs and gutters, storm sewers, and drainage improvements accepted by the Town shall be dedicated to the Town and warranted for a period of two (2) years following probationary acceptance by the Town, as provided above. Upon completion of construction and conformity with the site plan and associated construction plans, and any properly approved changes, the Developer shall convey to the Town, by bill of sale, all installed physical facilities.

10. Performance Guarantee. In order to secure the construction and installation of the Public Improvements, the Developer shall, prior to issuance of any building permit on the Property, furnish the Town, at the Developer's expense, with the performance guarantee described herein. The performance guarantee provided by the Developer shall be an irrevocable letter of credit in which the Town is designated as beneficiary in an amount equal to one hundred ten percent (110%) of the estimated costs of the Public Improvements to be constructed and installed, as set forth in **Exhibit C**, to secure the performance and completion of the Public Improvements. The Developer agrees that approval of the site plan by the Town is contingent upon the Developer's provision of an irrevocable letter of credit to the Town by November 7, 2025, which is one-year from the execution of the original Agreement, in the amount and form provided herein. Failure of the Developer to provide an irrevocable letter of credit to the Town, in the manner provided herein, shall negate the Town's approval of the site plan. Letters of credit shall be substantially in the form and content set forth in **Exhibit D**, attached hereto and incorporated herein, and shall be subject to the review and approval of the Town Attorney. The Developer shall not start the construction of any public or private improvement on the Property, including, but not limited to, staking, earth work, overlot grading or the erection of any structure, temporary or otherwise, until the Town has received and approved the irrevocable letter of credit.

The estimated costs of the Public Improvements shall be a figure mutually agreed upon by the Developer and the Town's Director of Public Works, as set forth in **Exhibit C**. If, however, they are unable to agree, the Director of Public Works' estimate shall govern after giving consideration to information provided by the Developer, including, but not limited to, construction contracts and engineering estimates. The purpose of the cost estimate is solely to determine the amount of security. No representations are made as to the accuracy of these estimates and the Developer agrees to pay the actual costs of all such Public Improvements.

The estimated costs of the Public Improvements may increase in the future. Accordingly, the Town reserves the right to review and adjust the cost estimates on an annual basis. Adjusted cost estimates will be made according to changes in the Construction Costs Index, as published by the Engineering News Record. If the Town adjusts the cost estimate for the Public Improvements, the Town shall give written notice to the Developer. The Developer shall, within thirty (30) days after receipt of said written notice, provide the Town with a new or amended letter of credit in the amount of the adjusted cost estimates. If the Developer refuses or fails to so provide the Town with a new or amended letter of credit, the Town may exercise the remedies provided for in paragraph 4 of this Agreement; provided, however, that prior to increasing the amount of additional security required, the Town shall give credit to the Developer for all required Public

Improvements which have actually been completed so that the amount of security required at any time shall relate to the cost of required Public Improvements not yet constructed.

In the event the Public Improvements are not constructed or completed within the period of time specified by paragraph 7 of this Agreement or a written extension of time mutually agreed upon by the parties to this Agreement, the Town may draw on the letter of credit to complete the Public Improvements called for in this Agreement. In the event the letter of credit is to expire within fourteen (14) calendar days and the Developer has not yet provided a satisfactory replacement, the Town may draw on the letter of credit and either hold such funds as security for performance of this Agreement or spend such funds to finish the Public Improvements or correct problems with the Public Improvements, as the Town deems appropriate.

Upon completion of performance of such improvements, conditions and requirements within the required time and the approval of the Town Public Works Director, the Developer shall issue an irrevocable letter of credit to the Town in the amount of twenty percent (20%) of the total cost of construction and installation of the Public Improvements, to be held by the Town during the two-year warranty period. If the Public Improvements are not completed within the required time, the monies may be used to complete the improvements.

11. Nuisance Conditions. The Developer agrees to prevent the existence of any nuisances by way of its construction activities. In the event the authorized inspector/designated Town authority determines that a nuisance exists, the Developer shall be subject to the provisions set forth in Elizabeth Municipal Code regarding the abatement of nuisances and the cost assessed for the abatement thereof.

In addition to the provisions above, if the nuisance is not abated or an abatement plan is not submitted to the satisfaction of the Town, the Town may, upon thirty (30) days' notice under this Agreement, exercise the right to draw upon the performance guarantee specified in paragraph 10 of this Agreement. The Town may draw on the performance guarantee in order to pay the cost of abating the nuisance, including any expenses and penalties incurred under the Elizabeth Municipal Code. The Town may exercise this right in addition to, or in lieu of, the withholding of permits and/or the withholding of certificates of occupancy. The right to draw on the performance guarantee shall be subject to the sole discretion of the Town, provided the Developer has received thirty (30) days' notice, as provided herein.

12. Indemnification. The Developer shall indemnify and hold harmless the Town, its officers, employees, agents or servants from any and all suits, actions and claims of every nature and description caused by, arising from or on account of any act or omission of the Developer, or of any other person or entity for whose act or omission the Developer is liable, with respect to construction of the Public Improvements; and the Developer shall pay any and all judgments rendered against the Town as the result of any suit, action or claim, together with all reasonable expenses and attorney fees incurred by the Town in defending any such suit, action or claim.

The Developer shall pay all property taxes on the Property dedicated to the Town, and shall indemnify and hold harmless the Town for any property tax liability.

The Developer shall require that all contractors and other employees engaged in construction of Public Improvements shall maintain adequate workers' compensation insurance and public liability coverage and shall faithfully comply with the provisions of the Federal Occupational Safety and Health Act.

13. Waiver of Defects. In executing this Agreement the Developer waives all objections it may have concerning defects, if any, in the formalities whereby it is executed, or concerning the power of the Town to impose conditions on the Developer, as set forth herein, and concerning the procedure, substance and form of the ordinances or resolutions adopting this Agreement.

14. Modifications. This Agreement shall not be amended, except by subsequent written agreement of the parties.

15. Release of Liability. It is expressly understood that the Town cannot be legally bound by the representations of any of its officers or agents or their designees, except in accordance with the Elizabeth Municipal Code and the laws of the State of Colorado.

16. Captions. The captions to this Agreement are inserted only for the purpose of convenient reference and in no way define, limit or prescribe the scope or intent of this Agreement or any part thereof.

17. Binding Effect. This Agreement shall be binding upon and inure to the benefit of the parties hereto and their respective heirs, successors and assigns, as the case may be.

18. Invalid Provision. If any provision of this Agreement shall be determined to be void by any court of competent jurisdiction, then such determination shall not affect any other provision hereof, and all of the other provisions shall remain in full force and effect. It is the intention of the parties hereto that if any provision of this Agreement is capable of two constructions, one of which would render the provision void and the other which would render the provision valid, then the provision shall have the meaning which renders it valid.

19. Governing Law. The laws of the State of Colorado shall govern the validity, performance and enforcement of this Agreement. Should either party institute legal suit or action for enforcement of any obligation contained herein, it is agreed that venue of such suit or action shall be in Elbert County, Colorado.

20. Attorney Fees. Should this Agreement become the subject of litigation to resolve a claim of default of performance by the Developer and a court of competent jurisdiction determines that the Developer was in default in the performance of the Agreement, the Developer shall pay the attorney fees, expenses and court costs of the Town.

21. Notice. All notice required under this Agreement shall be in writing and shall be hand delivered or sent by registered or certified mail, return receipt requested, postage prepaid, to the addresses of the parties herein set forth. All notices so given shall be considered effective seventy-two (72) hours after deposit in the United States mail with the proper address, as set forth below. Either party, by notice so given, may change the address to which future notices shall be sent.

Notice to the Town:	Town of Elizabeth Attn: Town Administrator 151 S. Banner Street Elizabeth, Colorado 80107
With copy to:	Corey Y. Hoffmann, Esq. Hoffmann, Parker, Wilson & Carberry, P.C. 511 16th Street, Suite 610 Denver, Colorado 80202
Notice to Developer:	Banner Paired Homes LLC Attn: Lane Gregory 367 Sandy Hollow Trl Franktown, Colorado 80116

22. Force Majeure. Whenever the Developer is required to complete the construction, repair or replacement of Public Improvements by an agreed deadline, the Developer shall be entitled to an extension of time equal to a delay in completing the foregoing, due to unforeseeable causes beyond the control and without the fault or negligence of the Developer, including, but not limited to, acts of God, weather, fires and strikes.

23. Approvals. Whenever approval or acceptance of the Town is necessary, pursuant to any provision of this Agreement, the Town shall act reasonably and in a timely manner in responding to such request for approval or acceptance.

24. Assignment or Assignments. There shall be no transfer or assignment of any of the rights or obligations of the Developer under this Agreement, without the prior written approval of the Town. The Developer agrees to provide the Town with at least fourteen (14) days' advance written notice of the transfer or assignment of any of the rights and obligations of the Developer under this Agreement.

25. Title and Authority. The Developer expressly warrants and represents to the Town that it is the record owner of the property constituting the Property and further represents and warrants, together with the undersigned individuals, that the undersigned individuals have full power and authority to enter into this Site Plan Agreement. The Developer and the undersigned individuals understand that the Town is relying on such representations and warranties in entering into this Agreement.

WHEREFORE, the parties hereto have executed this Agreement on the day and year first above written.

TOWN OF ELIZABETH, COLORADO

By: _____
Angela Ternus, Mayor

ATTEST:

_____
Michelle M. Oeser, Town Clerk

APPROVED AS TO FORM:

_____
Corey y. Hoffmann, Town Attorney

DEVELOPER: Banner Paired Homes LLC

By: _____
Lane Gregory

STATE OF COLORADO)
)ss.
COUNTY OF _____)

The foregoing instrument was acknowledged before me this _____ day of _____, 20__, by _____, as _____ of _____.

My commission expires: _____.

(SEAL)

_____
Notary Public

WATER AND SEWER STANDARDS

FOR THE

TOWN OF ELIZABETH

FINAL DRAFT

APRIL 2025

TABLE OF CONTENTS

PAGE

SECTION 1 APPLICATION AND DEFINITIONS 1
1.1 APPLICABILITY 1
1.2 DEFINITIONS 1

SECTION 2 SYSTEM REQUIREMENTS, DESIGN AND SIZING 4
2.1 PURPOSE 4
2.2 OWNERSHIP OF FACILITIES 4
2.3 DRAWINGS 4
2.4 EASEMENTS 5
2.5 SEWER COLLECTION SYSTEM REQUIREMENTS 5
2.5.1 Specially Regulated Wastes 6
2.5.2 Prohibited Wastes 6
2.5.3 Pretreatment 7
2.5.4 Sump Pumps and Illegal Devices 8
2.5.5 Grease, Oil or Sand Interceptors 8
2.5.6 Swimming Pools 10
2.6 SEWER MAIN DESIGN / SIZING 10
2.7 WATER SYSTEM REQUIREMENTS 11
2.8 WATER DISTRIBUTION DESIGN / SIZING 11
2.9 INSPECTIONS 12
2.10 ACCEPTANCE CHECKLIST 12

SECTION 3 LOCAL SEWER AND WATER STANDARDS 14
3.1 PURPOSE 14
3.2 SANITARY SEWER MATERIALS 14
3.3 WATER MAIN MATERIALS 15
3.4 INSTALLATION 17
3.4.1 Sewer Installation 17
3.4.2 Manholes 17
3.4.3 Underdrains 18
3.4.4 Waterline Installation 18
3.4.5 Fire Hydrant Installation 19
3.4.6 Sewer and Water Main Pipe Bedding and Backfill 19
3.5 TESTING 23
3.5.1 Sanitary Sewer Line Testing 23
3.5.1.1 Pipeline Flushing 23
3.5.1.2 Alignment and Grade 24
3.5.1.3 Leakage Testing by Exfiltration 24
3.5.1.4 Leakage Testing by Infiltration 25
3.5.1.5 Low-Pressure Air Test 25
3.5.1.6 Deflection 27
3.5.2 Manholes 28

3.5.2.1 Visual Examination 28
3.5.2.2 Leakage Test 28
3.5.3 Television Inspection 29
3.5.4 Water Main Testing 29
3.5.5 Water Main Disinfection 30

SECTION 4 SERVICE LINE STANDARDS 31
4.1 GENERAL 31
4.2 OWNERSHIP AND MAINTENANCE 31
4.3 SERVICE CONNECTION 33
4.4 SEWER SERVICE SIZING 34
4.5 WATER SERVICE SIZING 34
4.6 SEWER SERVICE MATERIALS AND INSTALLATION 34
4.7 WATER SERVICE MATERIALS 35
4.8 WATER SERVICE INSTALLATION 36
4.9 DOCUMENTATION 36

SECTION 5 BACKFLOW PREVETION AND CROSS-CONNECTION CONTROL

STANDARD DETAILS

GENERAL

G1 - STANDARD APPROVAL BLOCK
G2 - TYPICAL WATER AND SEWER STREET PLAN
G3 - SEWER AND WATER LINE CROSSING
G4 - CONCRETE ENCASEMENT
G5 - SURFACE MARKER
G6 - BORE CASING
G7 - HARNESS LUGS – BORE CASING

SEWER SYSTEM

S1 - SEWER PIPE TRENCH
S2 - STANDARD MANHOLE
S3 - DROP MANHOLE
S4 - FLAT TOP MANHOLES
S5 - CAST-IN-PLACE MANHOLE BASES
S6 - GREASE INTERCEPTOR
S7 - SAND & OIL INTERCEPTOR

WATER SYSTEM

W1 - WATER PIPE TRENCH
W2 - HORIZONTAL THRUST BLOCKS
W3 - VERTICAL THRUST BLOCKS

W4 - MECHANICAL THRUST RESTRAINT
W5 - TRACER WIRE
W6 - BURIED VALVES
W7 - FIRE HYDRANT
W8 - BLOW-OFF
W9 - AIR RELIEF VALVE

SERVICE LINES

L1 - TYPICAL RESIDENTIAL SEWER SERVICE
L2 - SEWER SERVICE WYE CONNECTION
L3 - SEWER SERVICE LINE CLEANOUT
L4 - TYPICAL NEW SINGLE FAMILY DETACHED RESIDENTIAL WATER SERVICE

SECTION 1
APPLICABILITY AND DEFINITIONS

SECTION 1

APPLICATION AND DEFINITIONS

1.1 APPLICABILITY

These standards are to be applied in conjunction with the other administrative and procedural requirements of the Town of Elizabeth.

1.2 DEFINITIONS

Unless the context specifically indicates otherwise, the meaning of terms used herein shall be as follows (In addition, see Section 5 for backflow prevention specific definitions)

Acceptance shall mean formal notification by the Town to the Applicant that all the requirements of the "Checklist" have been met.

Actual Cost shall mean all direct costs applicable to the construction of a given facility, including surveys, preliminary and design engineering, construction, inspection, administrative, regulatory agency fees, bond fees, all required easements and/or rights-of-way, plan approval fees, "as-built" drawings, attorneys' fees, and other costs necessary for completion.

Applicant shall mean the person(s), firm, joint venture, partnership or corporation which is requesting service from the Town. In this document, the words "applicant" and "developer" have been used interchangeably.

Board and Board of Trustees shall mean the governing body of the Town of Elizabeth.

B.O.D. (Denoting 5-Day, 20 degrees centigrade Biochemical Oxygen Demand) shall mean the amount of oxygen which is utilized in the aerobic decomposition of Sewage under laboratory procedures in accordance with the current "Standard Methods for the Examination of Water and Wastewater" published by the American Public Health Association, the American Water Works Association and the Water Environment Federation.

Contractor shall mean the entity working on behalf of the developer to construct utilities or other physical improvements.

CDPHE shall mean the Colorado Department of Public and Health and Environment.

Cross-Connection means any physical arrangement whereby a public water supply is connected, directly or indirectly, with any other water supply system, sewer, drain, conduit, pool, storage reservoir, plumbing fixture or other device which contains, or may contain, contaminated water, sewage or other waste or liquid of unknown or unsafe quality which may be capable of imparting contamination to the public water supply as a

result of backflow. Bypass arrangements, jumper connections, removable sections, swivel or changeover devices, and other temporary or permanent devices through or because of which backflow could occur are considered to be cross connections.

Customer shall mean any person, company, corporation or governmental authority or agency authorized to use the public water or sewer systems under a permit issued or otherwise authorized by the Board of Trustees or the Town Administrator.

Developer shall mean the person(s), firm, joint venture, partnership or corporation which is the owner or operator of land and which seeks to have the land served by the Town.

Engineer shall mean the engineering firm, or duly authorized representative (engineer), designated by the Town to act on its behalf in all engineering and related matters. This item includes an Inspector employed by the Engineer.

Engineer of Record shall mean the Professional Engineer, registered with the State of Colorado, who is responsible for the design of utilities or other improvements on behalf of the Developer.

EQR This is an abbreviation for Equivalent Residential Unit which is an average single-family detached residence or the equivalent, from a systems demand standpoint.

Inspector shall mean the Manager, Superintendent, Engineer, agent, officers, employees of the Town or other person so designated by the Manager to perform inspections pursuant to these Standards or other Rules and Regulations of the Town.

Local Facilities are those facilities generally designed primarily to serve individual subdivisions or plats. Examples are: water distribution systems, collector sewer lines and storm drainage collection systems.

Manager shall mean Manager of the Town, Public Works Director or, the Manager's duly authorized agent.

Owner shall mean the land's record title holder or lessee with planning powers.

Oversize Costs this item is applicable to part of the construction costs of a water distribution line or sewer main to be installed within, or for, a subdivision; but which the Town has also assigned a transmission function which results in the need for a larger pipeline. Oversize costs are the difference between the actual costs of the size line required by the Town and the size required by the Developer; however, for purposes of determining oversize, the minimum size shall be assumed to be 12-inch diameter for water and 10-inch diameter for sewer. Engineering and inspection costs are not included, only construction costs. The additional cost for the oversize may be negotiated between the Town and the Developer.

PRV shall mean pressure reducing valve.

PVC shall mean poly vinyl chloride.

Permit shall mean written permission of the Board of Trustees authorizing connection to water or a sewer main of the Town granting applicant a license to use the system or to receive service from the system owned, operated or served by the Town.

Person shall mean any individual, firm, company, association, society, corporation or group.

Raw Water shall mean water that has not been treated.

Regional Facilities shall mean those facilities generally serving the Town's service areas as a whole. Examples are: water sources, water treatment plants, wastewater treatment plants, lift stations, tanks, and water transmission lines or trunk sewer mains.

Sewage shall mean any liquid waste containing animal or vegetable matter in suspension or solution from residences, commercial buildings, institutions, and industrial establishments.

Sewer or Sewer Main shall mean a Town-owned sewer pipeline, carrying sanitary sewage or approved industrial wastes only, and shall be installed in a public street or easement.

Sewer Service Line shall mean the privately owned sewer line extending from the building to the sewer main and shall include the tap onto the sewer main.

Shall is mandatory; "May" is permissive.

Town shall mean the Town of Elizabeth or the Board of Trustees of the Town.

Water Main shall mean a Town-owned water pipeline, carrying potable water only and shall be installed in a public street or easement.

Water Service Line shall mean the water line extending from the water main to the Customer's building, and shall include the tap on the main, corporation cock, curb stop and box and meter installation (see Section 4 for ownership responsibilities).

SECTION 2
SYSTEM REQUIREMENTS, DESIGN AND SIZING

SECTION 2

SYSTEM REQUIREMENTS, DESIGN AND SIZING

2.1 PURPOSE

Local sewerage and water facilities are considered to be engineered improvements which are designed for specific applications. All designs, drawings and specifications must be prepared by, or under the direction of a Professional Engineer registered in Colorado, whose seal must be on a record set of documents. Local collection systems and water distribution systems are the responsibility of the Developer, who is responsible for design and construction and the costs thereof and for payment of actual costs of design reviews and other reviews and inspections provided by the Town. The standard details and specifications contained herein are minimum design standards which the Town will accept in order to facilitate perpetual operation and maintenance procedures.

2.2 OWNERSHIP OF FACILITIES

All existing and future Regional and Local Facilities connected with and forming an integral part of the Systems and accepted for operation and maintenance pursuant to these Standards shall become and are the property of the Town, unless a contract between the Town and the Owner provides otherwise. That portion of all existing and future Service Lines extending from a main to each resident, unit or building for each customer that is connected with the System shall become and is the property of the Owner/Customer (See Section 4 for further descriptions of Customer Ownership).

2.3 DRAWINGS

Unless otherwise approved by the Town, all design drawings shall be 24" x 36" in size. Drawing scale for area plans shall be 1" = 50'. Submission of ½ size sets (at scale) are acceptable for review purposes.

Prior to the construction or installation of any Local Facilities, the Developer shall submit Design Documents with appropriate fees to the Town for review and approval. [The Developer is encouraged to submit preliminary designs for review of the overall layout, prior to producing this set of design drawings for review.] Each review package submitted to the Town shall consist of four (4) sets, and a cover letter describing the project. Two copies are for the Town, and two copies are for review by the Town's Engineer. The Developer must also make an independent submittal to the Elizabeth Fire Department. The Town and/or its Engineer may request additional documentation or calculations, depending on the complexity of the application.

The cover sheet of each design drawing set shall have an "approval block" affixed thereto which provides for the signatures of authorized representatives of the Town of Elizabeth, the Town's Engineer, and the Elizabeth Fire Department. The "approval block" shall be a facsimile of that appended to these Standard Specifications, "Standard Approval Block," Drawing G1. Drawings

submitted for approval must be stamped and signed by a Professional Engineer registered in Colorado.

Construction may not begin until the Design Documents have been approved by the Town. The construction contractor(s) must have a copy of the signed, approved design documents in their possession at the construction site.

After completion of construction, the Developer shall also provide a complete set of record drawings for the facilities. The record drawings shall show sufficient dimensioned ties to reasonably permanent surface features for all buried facilities to allow for future locating. One copy of the record drawings, stamped and signed by the P.E. must also be submitted for the Town's records, along with an electronic copy on CD in the latest version of AutoCAD and also in PDF format.

2.4 EASEMENTS

Where Local Facilities are to be located out of the public right-of-way, the Developer shall be responsible for obtaining easements required for the construction, maintenance, and operation of the facilities. The Town will not accept alignments that could present access or construction problems in present or in the future (e.g., steep slopes or difficult vehicular access).

The legal description for the easements shall be prepared by a Professional Land Surveyor, registered in the State of Colorado. Easements shall be in a form acceptable to the Town and shall be shown on the construction drawings. The Town will not approve the Contract Documents until all required easements have been deeded to the Town.

In general, the minimum width of easements for pipelines shall be 30 feet. Temporary construction easements shall have a minimum width of 40 feet. Wider easements may be required for deep sections of pipeline, multiple lines, storm sewers, or where otherwise required by the Town. In general, an easement containing a water line and a sewer line shall be no less than 36 feet in width. No water line shall be located less than 5 feet from the edge of easement and no sewer main shall be located less than 10 feet from the edge of easement.

2.5 SEWER COLLECTION SYSTEM REQUIREMENTS

The Sewer Collection System is for the disposal of water contaminated by biodegradable wastes. No Person shall make connection of roof downspouts, exterior foundation drains, areaway drains, surface drains or other sources of surface runoff or groundwater to a building sewer or building drain which in turn is connected directly or indirectly to the Sewer Collection System. In order to protect the Sewer Collection System from damage, destruction, deterioration, misuse or malfunction and to guard against health hazards and the creation of public nuisance, the following regulations shall apply relative to the discharge of Sewage containing deleterious wastes.

A septic facility may not be utilized within the Town Service Area unless a waiver is obtained from the Town.

2.5.1 Specially Regulated Wastes

a) Industrial Wastes. No Person or Persons shall discharge or cause to be discharged any Industrial Waste of any type into the Sewer Collection System unless written permission is received from the Town.

b) Inflow/Infiltration. No Person or Persons shall discharge or cause to be discharged into the Sewer Collection System, storm drainage from ground surface, roof ladders, catch basins or any other source, or sub-surface drainage or ground water.

c) Other Wastes. Industrial cooling water, unpolluted process waters, bakery/restaurant wastes, car washing wastes, swimming pool drainage and floor drainage from enclosed and covered areas may be connected to the Sewer Collection System only by a special Permit from the Town. The application for such a Permit, in addition to information normally required for a Permit application, shall include the following:

- Name and address of the Owner.
- Location of the property for which the request is made.
- Description of the facility or operation requested for connection.
- Estimated quantities and qualities of the waste to be discharged including maximum rates.
- Plans and specifications of related waste generating processes and any pretreatment processes.

Such Permits issued by the Town may contain the following conditions:

- the construction of flow measuring and/or sampling devices;
- the construction of valves or gates to stop flows on an emergency basis;
- the construction of grease, oil or sand interceptors, or other pretreatment facilities;

or the Town may place other restrictions on the Permit as reasonably required under the circumstances. Nothing in this Section shall prohibit the Town from denying an application for a Permit if the Town determines that the demand on the System(s) impairs the Town's existing operations or use.

2.5.2 Prohibited Wastes

Toxic or non-biodegradable waste or any other waste which results in effluent not being within state standards after providing conventional treatment shall not be discharged into the Sewer Collection System. No drain accepting discharge from vehicle wash racks, filling stations, restaurants or other building sewers as specified by the Town shall be connected to any Sewer Service Line unless the discharge first passes through an acceptable grease, oil or sand interceptor. Except as provided herein, no Person shall discharge or cause to be discharged any of the following described waters or wastes to the Sewer Collection System:

a. Any liquid or vapor having temperatures higher than one hundred and four degrees Fahrenheit (104º F).
b. Any water or waste which may contain more than one hundred parts per million (100 ppm) by weight of animal or vegetable fat, oil or grease.
c. Any gasoline, benzene, naphtha, fuel oil or other flammable or explosive liquid, solid, gas, oil or grease, distilled alcohol
d. Any garbage that has not been properly shredded to less than one-half inch (½") in the largest dimension.
e. Any ashes, cinders, sand, mud, straw, shavings, metal, glass, rags, feathers, tar, plastic, wood, paunch manure or any other solid or viscous substance capable of causing obstruction to the flow in sewers or other interference with the proper and normal operation of the Sewer Collection System.
f. Any waters or wastes having pH lower than 5.0 or higher than 9.0, or having any other corrosive or toxic property capable of causing damage or hazard to structures, equipment or personnel of the Sewer Collection System.
g. Any water or wastes containing a toxic or poisonous substance in sufficient quantity to injure or interfere with any Sewage treatment process, constitute a hazard to humans, animals or fish, or create any hazard in the receiving waters of the sewer treatment plant effluent.
h. Any waters or wastes containing suspended solids of such character and quantity that unusual attention or expense is required to handle such materials at the sewer treatment plant.
i. Any noxious substances or malodorous waste, waters, gases or substance capable of creating a public nuisance, either in the sewer or at the sewer treatment plant.
j. A five (5) day B.O.D. concentration greater than three hundred parts per million (300 ppm).
k. A concentration of more than three hundred parts per million (300 ppm) of suspended solids.
l. Concentrated wastes from septic tanks and portable sanitary devices.
m. A peak flow rate greater than five (5) times the average flow rate.
n. Any chemicals having a twenty-four (24) hour proportionate composite sample concentration at the point of discharge in excess of the following:

Cadmium	0.10 mg/L
Chromium	5.0 mg/L
Copper	3.0 mg/L
Cyanides	2.0 mg/L
Iron	15.0 mg/L
Phenol	10.0 mg/L
H2s (Hydrogen Sulfide)	1.0 mg/L
Zinc	2.0 mg/L

2.5.3 Pretreatment

Where necessary, as determined by the Town, whose determinations shall be final, the Customer shall provide, at its sole cost and expense, such preliminary treatment as may be deemed

necessary. Where preliminary treatment facilities are provided for any waste or water, they shall meet with the approval of the Town for adequacy of design, and once built, shall be maintained continuously in satisfactory and effective operation by the Customer. When required by the Town, the Customer of any property served by a Service Line carrying Industrial Wastes shall install a suitable control manhole or monitoring point in the building sewer to facilitate observation, sampling and measurement of the Industrial Wastes. Such manhole or monitoring point shall be accessible and safely located and constructed in accordance with plans and specifications approved by the Town. The manhole or monitoring point shall be installed and maintained by the Customer at its expense.

2.5.4 Sump Pumps and Illegal Devices

No plumbing fixture, device, construction or plumbing system shall be installed within any building or improvement which will provide a connection between the Sewer Collection System, directly or indirectly, or with a Sewer Service Line for the purpose of draining ground or surface waters into the Sewer Collection System, and no physical connections shall be permitted whereby a Sewer Service Line is connected to a sump pump or other facility in such a manner that through either the manipulation of valves, the lack of back pressure valves, or as a result of any other arrangement or connection, it is possible to drain flood, overflow, storm or ground water directly or indirectly into the Sewer Collection System. Any Person having connected, or permitting to be connected, such a system to a Sewer Service Line or a Sewer Main, may be given notice to immediately disconnect such device or pumping system at his cost, and upon failure to do so, the Town may forthwith disconnect any Sewer Service Line from the property containing such a forbidden device or pumping system at the Sewer Main. The cost of such disconnection shall be a lien and charge against the property involved. No Sewer Service Line shall thereafter be connected to the Sewer Collection System without payment of the re-connection fee to the Town, and all costs and expenses of the Town relative thereto and positive proof that such improper and illegal connection or device has been removed and will not thereafter be re-connected to the Sewer Collection System.

2.5.5 Grease, Oil or Sand Interceptors

a) General - Design, Installation and Location. Grease, oil or sand interceptors shall be provided and installed at the sole cost and expense of the Customer when, in the opinion of the Manager, they are necessary for the proper handling of liquid wastes containing greases, oil, etc., in excessive amounts, or any flammable wastes, sand or other harmful ingredient. Fixtures that must be connected include, but are not limited to all kitchen service drains, scullery sinks, pot and pan sinks, dishwashing machines, soup kettles, garbage disposals and floor drains located in areas where materials containing grease may exist. Toilets, urinals, and similar fixtures shall not be connected to the interceptor. Upon prior approval by the Town, interceptors will not be required for facilities where food is served but not cooked at the facility, and/or no equipment or utensils associated with the preparation or service of cooked foods are washed at the facility. At a minimum, the interceptor shall be designed in accordance with the 2012 International Plumbing Code (IPC). The Customer shall also submit the proposed menu as part

of the sizing calculations. The Town reserves the right to adjust the proposed sizing based on the proposed menu. All interceptors shall be located as to be readily available and accessible for cleaning and inspection. Grease, oil or sand interceptors shall be constructed of impervious materials capable of withstanding abrupt and extreme changes in temperature. Interceptors shall be watertight, and, if necessary, as determined by the Town, gastight and vented.

b) **New Buildings:** Interceptors for new buildings shall be approved by the Town and shall have a minimum of two (2) compartments with fittings designed for grease, oil and/or sand retention. There shall be at least two (2) manholes lids for each interceptor to provide access for cleaning and inspection of all fixtures and compartments. Interceptors for new buildings shall be located outside of the facility served and will not be allowed in drive-through driveways or next to main entranceways. Location of all interceptors shall be approved by the Town and shall be shown on the approved final development plan. Grease interceptors shall conform to Detail S6 and sand/oil interceptors shall conform to Detail S7, as applicable. The volume of a grease interceptor shall be determined by multiplying the total rate of flow in gallons per minute from each fixture required to be connected to the interceptor times a minimum retention time of not less than 15 minutes, the resulting volume expressed in gallons. The minimum acceptable grease interceptor volume shall be not less than 750 gallons. The flow rate from each fixture is provided in the following schedule:

TYPE OF FIXTURE	RATE OF FLOW (GPM)
Floor drain/sink	10
Restaurant kitchen sink	15
Single compartment scullery sink	20
Three compartment sinks	35
Two single compartment sinks	25
Two double compartment sinks	35
Restaurant dishwasher:	
up to 30 gallon water capacity	15
30 to 50 gallon water capacity	25
50 to 100 gallon water capacity	40
Garbage disposal/grinder	35

The volume of a sand/oil interceptor shall be determined as depicted in the following with a minimum acceptable volume of not less than 500 gallons.

Parking Garage – A base of forty-five (45) gallons plus eight (8) gallons per ten (10) vehicles
Repair Garage, Warehouse – A base of Forty-five (45) gallons plus eight (8) gallons per one hundred (100) square feet of building area.

c) Maintenance and Inspection. Where installed, all grease, oil or sand interceptors shall be maintained by the Customer at its sole cost and expense, in continually efficient operation at all times. The Town requires a monthly or periodic cleaning and pumping of any grease, oil or sand interceptors. The Customer shall maintain

a cleaning and maintenance record. At a minimum, the previous two years' maintenance records shall be filed at the property for periodic review by the Town. The Town may make inspections of grease, oil or sand interceptors and in the event the Customer/Owner is in violation of these requirements, the Customer/Owner may be liable for payment of a penalty (Per EMC 13-6-50). The cost of the Town's inspections may be billed directly by the Town to the Customer and/or Owner and, in addition, may include all other costs incurred by the Town in inspecting the interceptor.

2.5.6 Private Lift Stations

The Town will allow the construction and use of a private lift station if the customer or the engineer or representative working on behalf of the customer has exhausted all avenues of providing a gravity lateral sewer. In the event a private lift station is installed, the private lift station is the sole responsibility of the customer. The lift station shall be designed and permitted (if applicable) in conformance with CDPHE standards. Expenses associated with operating and maintaining the lift station shall be the responsibility of the customer. The Town shall be granted access to inspect the lift station upon request and reserves the right to isolate the system due to any violations of these Standards. .

2.5.7 Swimming Pools

No public or private swimming pool shall be connected to the Sewer Collection System without first obtaining a special Permit from the Town. Such Permit shall define and specify the hours during which water may be discharged from such pools into the Sewer Collection System.

2.6 SEWER MAIN DESIGN / SIZING

Collection sewer system design is intended to provide gravity service only. Before the start of design, the Developer is to contact the Town Engineer to confirm the connection point with the existing sewer system. Sewer line sizing is to be approved by the Town Engineer. The Town may direct the Developer to provide sewer line capacity in excess of the Developer's requirements. In such cases, the Town may negotiate reimbursement to the developer for the incremental cost of the oversize. Sewage lift stations and force mains will not be permitted unless specifically authorized by the Town.

Collection sewers shall be designed to carry not less than the projected peak flow rates flowing half full (safety factor = 2.0), unless otherwise approved by the Town Engineer. The minimum size collection sewer shall be 8" diameter. Sewers shall be so designed and constructed to give mean velocities, when flowing full, of not less than 2 feet per second.

When located in public streets, sewer mains shall be positioned on the west and south sides of the street center line. The mains shall be located proximately 5 to 10 feet from road center line and a minimum distance of 5 feet from the lip edge of the gutter pan (See Drawing G2). Sewers

shall generally be designed with sufficient depth to serve basements by gravity. The minimum cover shall be 6 feet from top of sewer to finished grade.

Water and sewer lines shall have a 10 feet minimum horizontal separation. Where this separation is impractical, the Town may permit other separation requirements, in accordance with applicable standards. If a water line passes under a sewer main or service, or if it lies within 10 feet of the sewer, the water line is to be protected per Drawing G3 and Drawing G4. When specifically authorized by the Engineer, other encasement or water line protection alternatives may be permitted. Manholes shall be located at a maximum spacing of 300 feet center-to-center and also at changes in sewer pipeline alignment and/or grade and at the end of each line. Sewers shall be laid with uniform slope between manholes.

Drop manholes (per Drawing S3) are to be provided for any pipeline whose invert entering the manhole is greater than 24" above the invert out.

2.7 WATER SYSTEM REQUIREMENTS

The Town Water Distribution System has been planned and constructed to provide Potable Water for conventional domestic and commercial uses and fire protection and irrigation. Any application for industrial or a high-demand commercial water supply, which use could be expected to require large quantities of water or unusual demand rates, shall be required to submit demand data before a Permit will be issued and said Permit may contain use limitations as determined to be necessary by the Town.

Water from the Water Distribution System and water from any other source shall be distributed through systems entirely independent of each other and Cross-Connection between such supplies is prohibited. Where any potential of backflow is present, a protective device or system, acceptable to the Town, shall be installed to prevent its occurrence. The installation, testing and maintenance of the protection device shall comply with the Backflow Prevention and Cross-Connection Control standards presented in Section 5.

All lawn sprinkler systems shall be equipped with a vacuum breaker approved by the Town.

2.8 WATER DISTRIBUTION DESIGN / SIZING

Water mains shall be designed to meet the more stringent of the following two conditions:

a. Maximum hourly demand with pressures not less than 40 psi at any point of the distribution system, or

b. Maximum daily demand rate plus fire flow demand (as determined by IS0 guidelines) with delivery pressures of not less than 20 psi at the hydrant.

The normal minimum size water distribution main shall be 12" or 8" for short looped lines in single-family residential areas. Six-inch mains may be individually approved by the Town for

dead-end mains serving no more than 15 residences with a fire hydrant near the end of the line, if this location and delivery rate meet the requirements of the Elizabeth Fire Department. Main line gate valves shall be located at a minimum frequency of every 600 feet and at all intersections. Crosses or tees shall include isolation valves on all legs, unless otherwise directed by the Town.

Water main sizing and connections shall be reviewed with the Town's Engineer prior to final detailing and drafting. The systems shall be designed to maximize interconnections and strengthening of the Town's water system. Where certain lines may also have a transmission function, in the opinion of the Town, the Town may direct that such lines be oversized.

Regulations normally require a 10-foot minimum horizontal separation between water and sewer mains. When located in public streets, potable water pipelines shall normally be positioned on the east or north sides of the street center line. The mains shall be located proximately 5 to 10 feet from road center line and a minimum distance of 5 feet from the lip edge of the gutter pan (See Drawing G2). Curved water line alignments are to be avoided if the water line is laid in the same easement or roadway as a sewer line.

2.9 INSPECTIONS

New installations, replacements, or repairs to the water distribution or sewer conveyance lines shall be inspected and approved by the Town or the Town’s designated Inspector. All work shall be performed in accordance with accepted workmanship practices and the specifications set forth and referenced herein. Any work not accepted by the Town shall be redone until compliant with these Standards. All appropriate permits and approved plans shall be kept on the job site during construction. After receipt of approved plans from the Town the Applicant shall give at least 48 hours notice to the Town prior to starting construction.

2.10 ACCEPTANCE CHECKLIST

Checklist for Acceptance of Town Facilities. To be completed after construction and prior to any service connections.

1. Construction of all Town facilities completed to Town Standards and to the approved plans.

2. All facilities tested to Town Standards and accepted by the Town's Engineer. (Furnish copies of soils compaction and materials tests).

3. Permanent survey monuments set at the corners of all easements.

4. Record drawings meeting Town Standards and sealed by a registered Professional Engineer (Hard and Electronic Copies).

5. Furnish a summary of total construction costs (including design costs) of all applicable water and sewer facilities. Include only facilities to be deeded to the Town.

6. Warranty Deed for all facilities to be owned by the Town.

7. Two-year Maintenance Bond to begin after the date of acceptance, except that if deficiencies are identified and repaired, a new two-year maintenance bond for the repaired Work is to begin starting on the date of acceptance of the repaired Work.

8. Payment of all fees and confirmation from Town's Attorney that the applicant for dedication of the facilities is not in default under any agreements within the Town.

9. Electronic Copy (CD) of sewer main video following initial acceptance (see Section 3.5.3)

SECTION 3
LOCAL SEWER AND WATER STANDARDS

SECTION 3

LOCAL SEWER AND WATER STANDARDS

3.1 PURPOSE

The standard details and specifications contained herein are minimum design standards which the Town will accept in order to facilitate perpetual operation and maintenance procedures. In addition, the engineer must also design in accordance with the minimum standards of other regulatory agencies. Review and approval of local facilities designs by the Town, its Engineer or other agencies (Elizabeth Fire Department) shall not relieve the Engineer of Record from responsibility for adequate design.

3.2 SANITARY SEWER MATERIALS

Pipe: Sewer pipe and fittings, 15 inches and smaller, shall be polyvinyl chloride (PVC), SDR 35 minimum thickness conforming to ASTM D3034. Joints shall be of the "slip on" type with integrally cast bell having an elastomeric gasket. For non-standard sewer line applications (e. g.: steep terrain; crossings of streams, ditches or drainages), the Town Engineer will issue project-specific requirements on request.

Manholes: Manhole bases, barrels and tops shall be precast concrete units conforming with ASTM C-478. Concrete for manhole bases and other similar items shall have a 28-day compressive strength of not less than 3,000 psi. All reinforcement required shall be standard deformed reinforcement conforming to the requirements set forth in ASTM A615, Grade 40.

The top section required for change of diameter shall be eccentric cone or flat top as depicted on Standard Drawings S2, S3, and S4. To bring the manhole cover to the correct elevation, the adjustment section of each manhole shall be pre-cast concrete grade adjustment rings. These rings shall be not less than 6 inches wide and furnished in heights to allow for 1-inch adjustment. Total adjustment height with grade rings, shall not exceed 12 inches.

Gaskets (O - rings) or flexible connection boots for connecting PVC pipe to manhole sections shall be specifically manufactured for that purpose. The gasket on boot shall be provided by the manhole manufacturer.

Manhole Joints: the joints between precast manhole sections are to be sealed with Ram-Nek LTM by Henry Company, or approved alternate gasket material.

External Joint Sealing: In addition to the gasket material used within the joints between sections of the manhole, an external joint wrap is required. Wrap is to be no less than 8" wide and is to be ConSeal CS-202 Butyl Rubber external joint wrap or Ram-Nek or approved equal.

Manholes for sewers of 15" diameter or less shall have a minimum inside diameter of 4 feet. Consult the Town’s Engineer for requirements for larger sewers. Manholes shall be constructed and installed in accordance with the Standard Drawings S2, S3, S4 and S5. Manholes in open

fields shall be designated with surface markers (see Drawings G5). Surface markers shall be flexible plastic manufactured by Carsonite or approved equal and shall be yellow in color with imprinted letters identifying sewer size and manhole number.

Manhole Covers: Manhole frames and covers shall be cast iron with the word "SEWER" cast on the cover. Unless otherwise specified, manhole lids shall be gasketed, unbolted lids, per Neenah R-1500 "self-sealing", or approved equal. If a gasketed, bolted lid is called for, it shall be Neenah Model R-1915-S1, or approved equal. Manhole covers shall include plastic infiltration inserts to protect against drainage inflow.

Manhole Steps shall be treaded, injection-molded polypropylene encapsulating a 112" grade 60 reinforcing rod. Shall be M.A. Industries step, Model PS-1 PF, or approved equal.

3.3 WATER MAIN MATERIALS

All water mains shall be Blue C900 or C905 PVC, conforming to ASTM 2241. Pipe joints shall be push-on type.

Fittings shall be ductile-iron, minimum 250 psi minimum working pressure, conforming to AWWA GI53 or C110 with mechanical joint connections meeting AWWA C111. Fittings shall have a cement mortar lining meeting AWWA 104 and bituminous exterior coating.

Sheathing: All ductile-iron, valves, and fittings shall be polyethylene sheathed in accordance with ANSl A21.5, AWWA C105, 10 mil minimum thickness.

Tracer Wire: A ten-gauge insulted tracer wire shall be required for all water mains. Wire termination boxes shall be provided, as depicted in Drawing W5.

Location Tape: All water lines shall be marked using blue detectable utility marking tape placed 8 to 10 inches below grade. The tape shall be PVC material 6-inches wide with a thickness of four (4) mils.

Surface Markers: Gate valves in open fields shall be designated with surface markers (see Drawings G5). Surface markers shall be flexible plastic manufactured by Carsonite or approved equal and shall be blue in color with imprinted letters identifying main size and valve number.

Pipeline Insulation: Where required at depths less than specified. Insulation shall be Dow STYROFOAM 115 or approved equal.

Line Valves: Line valves shall be provided to allow isolation of parts of the system for maintenance or repair. They are required approximately every 600 feet, or more frequently at intersections of mains to allow isolation of loops and branches. Line valves shall be provided on the legs of all cross and tee fittings, unless otherwise approved by the Town. A line valve is required between fire hydrants. Line valves shall comply with requirements for "Buried Valves."

Buried Valves: Valves, 12" and smaller, shall be non-rising stem, bronze mounted gate valves with mechanical joint ends conforming with AWWA C509. Valves shall have 2" square operating nuts and open left (counterclockwise rotation). Valves shall be Mueller, Clow, Waterous, or approved equal.

Valve Boxes: Each buried valve shall be provided with a cast-iron valve box and round cover. The box shall have a minimum inside diameter of 5 1/4" and be adjustable in length and of the screw type. The word "WATER" shall be cast on the cover. Valve boxes shall be "wide oval base" by Tyler, Clow, or approved equal. Valve boxes shall allow for at least 3 additional extensions above the level required for final grade at the time of installation. The top of all valve stems (including extensions) shall be located between 42” and 48" below final grade (See Drawing W6).

Fire Hydrants: Fire hydrants shall be of the dry barrel type and conform with AWWA C502. Hydrants shall have a 5 1/4" main valve, two 2-1/2" hose connections and one 4 1/2" pumper connection. Hydrants shall have 6- inch mechanical joint connections and safety traffic flange. Operating and cap nuts must be 1 ½”, Number 17 National Standard hex main valve that opens left. Fire hydrants shall be Mueller Centurion No. A-423, Waterous Pacer WB-67 with bronze seat ring, or approved equal (See Drawing W7).

Blowoffs: Blowoffs shall comply with Drawing W8. The top of all blowoff valve stems (including extensions) shall be located between 42" and 48" below final grade.

Air-Release Valves: Shall be provided at high points in the water distribution system. This may take the form of a fire hydrant or 2" blowoff (both manually operated), or an automatic air-release valve (See Drawing W9). The proposed location and use must be pre-approved by the Town.

Mechanical Joint Restraint: Joint restraint devices shall be made of ductile iron. Joint restraint devices shall be EBAA Iron, Inc., Megalug Series 1100 or 1700 or Uni-Flange Corp. Series 1400 or accepted equal.

Casing Spacers: Carrier pipes to be installed inside casings shall be installed with self-restrained casing spacers. Casing spacers shall provide axial thrust restraint to prevent pipe joint deflection during and after installation. They shall also provide dielectric insulation between the carrier pipe and the casing and facilitate installation of the carrier pipe into the casing. Spacers shall be installed at a maximum of every ten (10) feet of the pipeline to support the pipe barrel and the weight of its contents. Casing spacers shall be manufactured by Uni-Flange or Cascade Waterworks or approved equal.

3.4 INSTALLATION

3.4.1 Sewer Installation

The sewer system shall be installed in a thorough, workmanlike manner in accordance with the Design Documents that have been approved by the Town. The minimum bedding and backfill requirements shall be as shown on Drawing S1 and described in these standards.

The minimum cover shall be 6-feet from top of sewer line to finished grade. A minimum of 5-feet of cover will be allowed if at least 2 inches of an approved pipeline insulation is provided, per Drawing S1. If insulation is installed, use approximately 6-inches of sand or squeegee for the pipe zone materials above and beneath the insulation to protect it from breakage during backfill.

If the bottom of the excavation is soft or unstable, and in the opinion of the Town, is not a satisfactory support for the pipeline, further depth and/or width shall be excavated and refilled to 6-inches below the pipe outside diameter (excluding bells) with Trench Stabilization Material, as specified in Section 3.4.6.

Each pipe length and fitting interior, interior surface of bells, and exterior surface of spigots shall be cleaned of all foreign material before placing it in the trench and shall be kept clean all times thereafter. Each item must also be examined for cracks and other defects before installation.

Pipe shall be cut, only whenever necessary, to conform to location of manholes or connections. All cuts shall be straight, true, and at right angles to the axis of the pipe unless otherwise noted or directed by the Engineer. The cutting process shall leave a smooth end without damaging the pipe. All burrs shall be removed from the ends of cut pipe, and the end chamfered and lightly rasped or filed. All tools used in cutting pipe shall be subject to the Engineer's approval. The manufacturer's requirements for lubrication and gaskets must be followed.

Pipe laying shall proceed upgrade with the spigot ends of pipe pointing in the direction of the flow, unless otherwise approved by the Engineer. Each pipe length shall be laid true to line and grade in such manner as to form a close concentric joint with the adjoining pipe and to prevent sudden offsets to the flow line. Pipe shall be laid in an unwatered trench and shall not be used for draining water from the trench. Pipes are to be kept clean by capping or plugging ends.

3.4.2 Manholes

Manholes shall be constructed to conform to the Standard Details. The invert channels shall be smooth and semi-circular in shape, conforming to the inside of the incoming and outgoing sewer pipelines. Changes in direction of flow shall be made with a smooth curve of as large a radius as the size of the manhole will permit. Changes in size and grade of the channels shall be made gradually and evenly. Where differences in invert elevations exist, sloped flow channels shall be formed so the sewage does not undergo a vertical drop. The invert channels may be formed directly in the concrete of the manhole base. The floor of the manhole outside of the channel shall have a rough broom finish and shall slope toward the channels not less than 1 inch per foot nor more than 2 inches per foot. The top circumference of the base shall be finished level and

smooth to permit obtaining a watertight joint between the precast manhole sections and the cast in place base. The manhole covers shall be set with their tops at the grades set forth in the approved drawings. When a manhole top is above the ground line, the exposed ring shall be encased in non-shrink grout as shown on the Standard Details. Manhole tops without bolted, gasketed covers shall not be set at or below surrounding grade, except in paved roadways. The site shall be graded so that drainage is away from the manhole.

Each joint of the precast manhole barrel shall have at least one continuous Ram-Nek gasket placed on the lower ledge before the barrel immediately above is lowered into place.

For poured-in-place bases (See Drawing S5), joints between the precast manhole barrel sections and the cast in place manhole bases shall have two continuous gaskets and shall be grouted inside and outside using approved non-shrink grout. With a poured-in-place base, the surface of the precast barrels and the cast in place bases shall be smooth and sound. The joint surfaces shall be cleaned to remove any concrete projections or dirt which may prevent a water-tight seal from being established. The joints shall be prepared and the gaskets shall be placed in accordance with the manufacturer's recommendations.

External Joint Sealing Wrap is to be applied to clean concrete surfaces per manufacturer's requirements. Must be applied immediately prior to backfilling, so when backfill is compacted the earth pressure forces bituminous wrap into concrete surfaces. Temperature of manhole sections and of backfill materials must be above 40 deg. F from time of applying wrap to time of backfilling.

3.4.3 Underdrains

The Town does not allow the use of underdrains laid in the same trench as a sanitary sewer line.

3.4.4 Waterline Installation

Water pipelines shall be installed in a thorough and workmanlike manner in accordance with the Design Documents that have been approved by the Town. The minimum bedding and backfill requirements are depicted on Drawing W1 and described in Section 3.4.6. The minimum cover shall be 5 feet from top of water line to finished grade. Pipelines shall not be placed deeper than 10 feet without prior approval by the Town.

A minimum of 3 feet 6-inches of cover will be allowed if at least 8 inches of an approved pipeline insulation is provided, per Drawing W1. If insulation is installed, use approximately 6-inches of sand or squeegee for the pipe zone materials above and beneath the insulation to protect it from breakage during backfill.

If the bottom of the excavation is soft or unstable, and in the opinion of the Town, is not a satisfactory support for the pipeline, further depth and/or width shall be excavated and refilled to 6-inches below the pipe outside diameter (excluding bells) with Trench Stabilization Material, as specified and detailed in Section 3.4.6.

All pipeline fittings (i.e., bends, tees, plugs, and caps) shall be installed with concrete thrust blocks adequately designed for the specific application and mechanically restrained for at least 40 feet in all directions. Thrust blocks shall be cast-in-place from concrete having a minimum compressive strength of 3,000 psi. Minimum requirements for horizontal and vertical thrustblocks are as shown on Drawing W2 and W3.

Alternate means of thrust restraint may be considered and approved for use where proved to provide similar restraint. Supplemental restraint may also be required where the Engineer believes the soil bearing pressures to be inadequate, or where the Engineer is concerned about subsequent movement due to slope or other conditions of service. See Drawing W4 for mechanical joint restraint lengths and details. Valves near a fitting must be tied back to that fitting, using rodding or mechanical joints.

All dead ends shall be terminated with a fire hydrant or blow-off.

3.4.5 Fire Hydrant Installation

Fire hydrants shall be located as required by the Town and the Elizabeth Fire Department and shall be placed at a maximum interval of every 500 feet. The Developer shall be required to obtain the approval by the Elizabeth Fire Department for fire hydrant locations. In general, hydrants shall be located at a minimum of 18-inches behind curbs or sidewalks. Fire hydrants shall be installed in accordance with Drawing W7. Each hydrant shall be connected to the main by a six-inch (6”) branch line. An independent six-inch (6”) gate valve shall be installed on the tee off the water main. The length of the branch fire line shall be a maximum of 50 feet and no service line connections shall be made on the fire hydrant branch line.

3.4.6 Sewer and Water Main Pipe Bedding and Backfill

a. Trench Zones. The terms "Bedding Zone", "Pipe Zone" and "Backfill Zone" shall refer to the trench zones identified in the Standard Details S1, and W1.
   1) Bedding zone. The Bedding Zone shall consist of all material placed below the pipe invert or, when permitted, the native materials graded and prepared for direct placement of the pipe.
   2) Pipe zone. The Pipe Zone shall consist of all material placed above the pipe invert to an elevation shown on the details.
   3) Backfill zone. The Backfill Zone shall consist of all material above the Pipe Zone.

b. Material. All bedding and backfill material shall have the approval of the Engineer. All bedding and backfill material shall be free of frozen material, organic material and debris. The materials to be used in each trench zone are indicated on the Standard Details and these materials are described below. All materials may be subject to gradation tests and compaction tests prior to approval of the use of that material. The test results shall be submitted to the Engineer for approval and verified as to their accuracy. These tests shall be performed at no cost to the Town or its agents.

1) Sand bedding or sand backfill material. This material shall be a clean, well-graded sand and shall conform to the following limits when tested by means of laboratory sieves:

Well-Graded Sand

Sieve Size	Total Percent Passing by Weight
3/18 – inch	100
No. 4	70 - 100
No. 8	36 - 93
No. 16	20 - 80
No. 30	8 - 65
No. 50	2 - 30
No. 100	1-10
No. 200	0 - 3

2) Roadbase bedding material or roadbase backfill. This material shall be Class 6 aggregate base course as specified by the latest version of the State of Colorado Department of Highways; and shall meet the following gradation:

Sieve Size	Total Percent Passing by Weight
¾ – inch	100
No. 4	30 - 65
No. 8	20 - 55
No. 200	3 - 12

3) Squeegee Sand. This material shall be clean, well graded and conform to the following limits when tested by means of laboratory sieves:

Sieve Size	Total Percent Passing by Weight
3/8 – inch	100
No. 200	0 – 5

4) Granular bedding or granular backfill material. This material shall be imported crushed rock or angular surfaced gravel and meet the following gradation (ASTM D448, No. 67):

Sieve Size	Total Percent Passing by Weight
1 – inch	100
¾ - inch	90 – 100
3/8 – inch	20 -55
No. 4	0 – 10
No. 8	0 - 5

5) Select material. Select material shall not be permitted unless authorized by the Engineer. This material shall consist of suitable material screened from the excavated earth having no rocks or stones greater in size than ¾-inch.

6) Trench stabilization material. This material shall be a ¾ inch to 1½ inch uniformly-graded, crushed rock or concrete aggregate.

7) Backfill material. Backfill material shall consist of suitable material from the excavated earth, meeting all the requirements of these standards.

No boulders over 6 inches in any dimension shall be allowed in the top 12 inches of the trench. All boulders shall be carefully placed so that no damage will be done to the pipeline. No backfill material shall have boulders larger than 24 inches in any dimension and the amount of boulders larger than 8-inches shall be less than 15% of the backfill volume. Boulders larger than 8 inches in any dimension shall be carefully lowered into the trench until the backfill is 4 feet over the top of the pipe.

c. Bedding and Backfill Installation:

1) General. The compaction requirements for the backfill zone shall conform to maximum dry density according to ASTM D698, Moisture-Density Relations of Soils (Standard Proctor). For the bedding and pipe zones, and when the ASTM D698 test is not applicable, the percentage compaction requirements shall conform to ASTM D4253, Test for Relative Density of Cohesionless Soils.

The Developer is responsible for providing (at no cost to the Town) adequate materials testing and/or geotechnical engineering resources to provide proper Quality Control and response to Quality Assurance directives by the Town or its agents. At a minimum, moisture density tests shall be taken one test for every 24-inch lift per 200 linear feet of trench and at every above ground appurtenance (i.e. valve box, manhole, hydrant, etc.)

When required by the Town, the Developer shall excavate backfilled trenches for the purpose of performing compaction tests at 'locations and depths required by the Engineer. The Developer shall be responsible for reinstalling and compacting the test excavations at no additional cost to the Town.

2) Bedding zone installation. Bedding material shall consist of the material on which the pipe is placed in accordance with the Drawings S1 and W1. Bedding material shall be placed to the required elevation of the pipe invert. Tamping and/or vibratory equipment shall be used to thoroughly tamp the bedding material to a minimum 75 percent relative density.

3) Pipe zone installation. After bedding material has been placed and approved and after the pipe has been installed and approved, the pipe zone backfill shall be installed to an elevation shown on the Standard Drawings.

The pipe zone material shall be as specified on the details and shall be placed and compacted in distinct, separate lifts not to exceed 6 inches of loose depth; except that the first loose lift shall not be higher than the pipe centerline (springline). If select backfill materials are permitted in this zone but acceptable select backfill material (suitable for placement within 12 inches of the pipe barrel) is not available at any particular location, the Developer shall use imported granular backfill material. Compaction shall meet the requirements of "Bedding Zone Installation," utilizing T-bars or mechanical tamping equipment.

4) Backfill zone installation. Unless otherwise provided in the Special Construction Provisions, the following method of installation shall apply. After the pipe zone backfill has been placed and approved, the trench shall be backfilled. All backfill above the pipe zone backfill shall be carefully placed in the trench in lifts no greater than 2 feet loose lifts. Each lift shall be compacted by mechanical equipment to 95 percent of laboratory dry density. After the trench is backfilled to the ground surface, the trench line shall be wheel rolled. If the backfill is depressed below the finished grade elevation, the depressed area shall be refilled and compacted. The backfill shall be mounded higher than the adjacent ground to allow for settlement.

5) Backfill zone installation in roads and streets. Beneath all traveled ways in roads and streets, highway shoulders and within 15 feet of pavement in State Highway Department rights-of-way (unless otherwise specified on the plans) backfill shall be carefully placed and compacted up to the limit of base course material or to gravel. Compaction shall be by mechanical tamping in 8-inch maximum loose lifts using mechanical or hand tampers, weighing not less than 20 pounds, or vibratory rollers. All other means must be approved in writing by the Engineer. All backfill shall be compacted to 95% of maximum laboratory dry density or 70 percent relative density. The material shall be within 2.0 percent of optimum moisture content. Finished backfill surface shall be proof rolled and exhibit no deflections.

The Developer may request approval of alternate means of compaction. Such request must be submitted from a registered engineer to the Town in writing. Approval of the compaction method will be made by the Town only in writing. Use of specified or approved compaction methods does not relieve the Developer from providing a completed project meeting the intent of this Specification.

d. Maintenance of Backfill. All backfill shall be maintained in a satisfactory condition and all places (including pavement) showing signs of settlement shall be filled and maintained for a period of two years following the date of final acceptance of all work performed. When the Developer discovers or is notified by the Engineer or the Town that

any backfill is not in compliance with these requirements, the Developer shall correct such condition at once. Any utilities and road surfacing damaged by such settlement shall be repaired by the Developer to the satisfaction of the Town and Engineer. In addition, the Developer shall be responsible for the cost to the Town of all claims for damages filed with the Court and actions brought against the said Town for, and on account of, such damage.

e. Dewatering. All pipe trenches shall be kept free from water during pipe installation and other related work. The method of dewatering shall provide for a completely dry trench bottom. Dewatering shall be accomplished by the use of well points, sump pumps, rock or gravel drains placed below subgrade or subsurface pipe drains. All water shall be disposed of in a suitable manner without being a menace to public health or causing public inconvenience. No water shall be drained into other work being completed or under construction. The dewatering operation shall continue until such time as it is safe to allow the water table to rise in the excavation. Pipe trenches shall contain enough backfill to prevent pipe flotation.

f. Trench Sub-grade in Poor Soils. In excessively wet, soft, spongy, unstable or similarly unsuitable material is encountered at the surface upon which the bedding material is to be placed, the unsuitable material shall be removed to a depth as determined in the field by the Town or it’s designated representative and replaced with Trench Stabilization material.

3.5 TESTING

3.5.1 Sanitary Sewer Line Testing

The following testing procedures are intended to determine if the sanitary sewer line meets the Town's minimum quality standards. Alternative procedures meeting or exceeding the intent of these procedures, as determined by the Town's Engineer, may be acceptable. In any case, however, proposed alternative testing procedures must be included in the design plans and specifications.

The Contractor shall notify the Town's Inspector - no less than 48 hours prior to the desired test time.

The Town's lnspector shall witness all tests and verify the accuracy and acceptability of the equipment utilized. The Town's Engineer will inform the Contractor regarding acceptable methods of repair in the event that one or more sections fail to pass any test.

3.5.1.1 Pipeline Flushing

The Contractor shall flush the pipelines, as the work progresses by means that are in accordance with good practice, to insure that earth, sand, rocks or other foreign materials are removed from the interior of the pipeline. Proper environmental and erosion control

prevention measures shall be employed meeting CDPHE latest Standards and Regulations.

3.5.1.2 Alignment and Grade

Sewer pipelines will be checked by the Town to determine whether any displacement of the pipe has occurred after the trench has been bedded. The test will be as follows:

A light will be flashed between manholes, or if the manholes have not as yet been constructed, between the locations of the manholes, by means of a flashlight or by reflecting sunlight with a mirror. If the illuminated interior of the pipelines shows poor alignment, displaced pipe, earth, or other debris in the pipe, or any other kinds of defects, the defects, determined by the Town, shall be remedied by the Contractor. The test will be repeated following completion of backfilling and any poor alignment, displaced pipe, or other defects, determined by the Town, shall be corrected at no cost to the Town.

3.5.1.3 Leakage Testing by Exfiltration

Tests for water tightness shall be made by the Contractor in the presence of the Town's Inspector. The Contractor shall provide assistance to the Town's lnspector in development of a detailed record of the testing program. The sewer and connections shall not leak in excess of the following rate for a 24-hour test period:

MAXIMUM ALLOWABLE SEWER LEAKAGE

Pipe Size Inches	Leakage Gal/Foot/24 Hours
18	0.68
15	0.57
12	0.45
10	0.38
8	0.30
6	0.23

Each reach of pipeline between manholes shall be tested individually. Any individual reach that leaks in excess of the amount allowed in the previous paragraph shall be considered as failing, and shall be repaired and retested.

At the discretion of the Town, the time for leakage rate test may be shortened to four (4) hours.

The tests and measurement of infiltration or exfiltration shall be conducted in a manner as approved by the Town's Inspector. The minimum head for the exfiltration tests shall be 2 feet above the top of the pipe at its highest point in the test section. Sections shall be bulk-headed so that during any test the head on the sewer at its lowest elevation will not be more than 10'. This restriction does not apply to ductile-iron pipe.

The Contractor shall repair the sewer in a manner that is satisfactory to the Town and re-test at the contractors' expense until a satisfactory installation is obtained.

3.5.1.4 Leakage Testing by Infiltration

Infiltration tests will be used if the groundwater table is likely to be 1 foot or more above the invert of the finished sewer. Otherwise, exfiltration tests will be used. The allowable leakage rates are as tabulated for section 3.5.1.3, Leakage Testing by Exfiltration.

3.5.1.5 Low-Pressure Air Test

At the option of the Contractor, low-pressure air testing of the installed sewer pipe may be used instead of the leakage exfiltration test.

The following criteria and procedure shall be utilized, unless otherwise approved by the Town's Inspector.

1) Plug Restraint. It is extremely important and essential that all plugs be installed and braced in such a way that blowouts are prevented. It is recommended that every plug be positively braced and that no one be allowed in the manhole adjoining a line being tested so long as pressure is maintained in the line.

2) Relief Valve. All pressurizing equipment used for low-pressure air testing shall include a regulator or relief valve set no higher than 9 psig to avoid over pressurizing and displacing temporary or permanent plugs. As an added safety precaution, the pressure in the test section should be continuously monitored to make certain that it does not at any time exceed 9 psig.

3) Plug Design. Either mechanical or pneumatic plugs may be used. All plugs shall be designed to resist internal testing pressures without the aid of external bracing or blocking. However, the Contractor should internally restrain or externally brace the plugs to the manhole wall as an added safety precaution throughout the test.

4) Singular Control Panel. To facilitate test verification by the inspecting Engineer, all air used shall pass through a single, above ground control panel.

5) Equipment Controls. The above ground air control equipment shall include a shutoff valve, pressure regulating valve, pressure relief valve, input pressure gauge, and a continuous monitoring pressure gauge having a pressure range from 0 to at least 10 psi. The continuous monitoring gauge shall be no less than 4 inches in diameter with minimum divisions of 0.10 psi and an accuracy of 0.04 psi.

6) Separate Hoses. Two separate hoses shall be used to: (1) connect the control panel to the sealed line for introducing low-pressure air, and (2) a separate hose connection for constant monitoring of air pressure build-up in the line. This requirement greatly diminishes any chance for over-pressurizing the line.

7) Pneumatic Plugs. If pneumatic plugs are utilized, a separate hose shall also be required to inflate the pneumatic plugs from the above ground control panel.

8) Laterals, Stubs, and Fittings. During sewer construction all service laterals, stubs, and fittings into the sewer test section shall be properly capped or plugged so as not to allow air loss that could cause an erroneous air test result. It may be necessary and is always advisable to restrain gasketed caps, plugs, or short pipe lengths with bracing stakes, clamps and tierods, or wire harnesses over the pipe bells.

9) Plug Installation and Testing. After manholes have been tested for alignment and grade, and a manhole-to-manhole reach of pipe has been backfilled to final grade and prepared for testing, the plugs shall be placed in the line at both manholes and secured.

It is advisable to seal test all plugs before use. Seal testing may be accomplished by laying one length of pipe on the ground and sealing it at both ends with the plugs to be checked. The sealed pipe should be pressurized to 9 psig. The plugs shall hold against this pressure without bracing and without any movement of the plugs out of the pipe. No persons shall be allowed in the alignment of the pipe during plug testing.

The upstream end of the line shall be plugged first to prevent any upstream water from collecting in the test line.

10) Line Pressurization. Low pressure air shall be slowly introduced into the sealed line until the internal air pressure reaches 4.0 psig.

11) Pressure Stabilization. After a constant pressure of 4.0 psig is reached, the air supply shall be throttled to maintain that internal pressure for at least 2 minutes. This time permits the temperature of the entering air to equalize with the temperature of the pipe wall.

12) Timing Pressure Loss. When temperatures have been equalized and the pressure stabilized at 4.0 psig, the air hose from the control panel to the air supply shall be shut off or disconnected. The continuous monitoring pressure gauge shall then be observed while the pressure is decreased to no less than 3.5 psig. The timing pressure loss test shall then commence at

a pressure reading of 3.5 psig, or any convenient observed pressure reading between 3.5 psig and 4.0 psig. (Except as adjusted for groundwater as follows.)

13) Air Pressure Adjustment. An air pressure correction, which must be added to the 3.5 psig normal test starting pressure, shall be calculated by dividing the average vertical height, in feet of groundwater above the invert of the sewer pipe to be tested, by 2.31. The result gives the air pressure correction in pounds per square inch to be added. (For example, if the average vertical height of groundwater above the pipe invert is 2.8 feet, the additional air pressure above the pipe invert is 2.8 divided by 2.31 or 1.2 psig. This would require a minimum starting pressure of 3.5 plus 1.2 or 4.7 psig). The allowable pressure drop of 1.0 psig and the timing in Table I are not affected and shall remain the same. In no case however should the starting test pressure exceed 9.0 psig.

14) Determination of Line Acceptance. If the time shown in Table I for the designated pipe size and length, elapses before the air pressure drops 1.0 psig, the section undergoing test shall have passed.

TABLE 1
SPECIFICATION TIME REQUIRED FOR A 1.0 PSIG PRESSURE DROP FOR SIZE AND LENGTH OF PIPE INDICATED FOR Q = 0.0015

1 (min:sec) Pipe Diameter (in.)	2 Minimum Time (min:sec)	3 Length for Minimum Time (ft)	4 Time for Longer Length (sec)	100 ft	150 ft	200 ft	250 ft	300 ft	350 ft	400 ft	450 ft
4	3:46	597	.380 L	3.46	3.46	3.46	3.46	3.46	3.46	3.46	3.46
6	5:40	398	.854 L	5:40	5:40	5:40	5:40	5:40	5:40	5:42	6:24
8	7:34	298	1.520 L	7:34	7:34	7:34	7:34	7:36	8.52	10:08	11:24
10	9:26	239	2.374 L	9:26	9:26	9:26	9:53	11:52	13:51	15:49	17:48
12	11:20	199	3.418 L	11:20	11:20	11:24	14:15	17:05	19:56	22:47	25:38
15	14:10	159	5.342 L	14:10	14:10	17:48	22:15	26:42	31:09	35:36	40:04
18	17:00	133	7.692 L	17:00	19:13	25:38	32:03	38:27	44:52	51:16	57:41

3.5.1.6 Deflection

All PVC sewer pipelines shall be tested for vertical deflection after placement and compaction of backfill unless testing is specifically excepted by the Town's Inspector. Method of testing shall be by deflectometer of the rigid GO/NO-GO type device. Alternative methods will be permitted only by written permission of the Town's Inspector. Maximum allowable deflection shall be five (5) percent of the pipe diameter.

Any and all pipe with vertical deflection greater than the allowable shall be excavated, removed from the pipeline, replaced, backfilled and compacted as specified and retested.

The Town reserves the right to direct the Developer to retest sewer lines after 10-12 months of service, if the Town has concerns about the condition of certain sections of pipe. Sections would be selected for retesting based on the results of the initial tests, the outcome of the television inspection (per Section 3.5.3), depth of cover, or other technical factors. The Developer shall perform such retesting at no cost to the Town.

3.5.2 Manholes

During the construction of the manholes, the Contractor shall, in accordance with good practice, ensure that no earth, sand, rocks or other foreign material exists on the joint surface during assembly of the sections. The Town's Inspector shall check each manhole to determine whether the manhole fulfills the requirements of the Drawings and Town's Standards.

3.5.2.1 Visual Examination

The Town shall visually check each manhole, both exterior and interior, for flaws, cracks, holes, or other inadequacies which might affect the operation or watertight integrity of the manhole. Should any inadequacies be found, the Contractor shall make any repairs deemed necessary by the Town’s Inspector.

3.5.2.2 Leakage Test

All manholes shall be tested for leakage and all tests shall be witnessed by the Town's Inspector. The leakage test shall be conducted prior to backfilling around the manhole and shall be carried out in the following manner:

1) All lines leading into or out of the manhole shall be tightly plugged
2) The manhole shall be filled with water to a level at least 2 inches above the uppermost step. The water shall be allowed to stand for two hours to allow for normal water absorption into the manhole material. At the end of the two-hour stabilization period, if the water level in the manhole has dropped below the top step, additional water will be added to bring the level above the step as before. Any visible external leakage or drop in water level noted within the one-hour test period shall constitute failure and the Contractor shall repair or replace the defective work and retest.
3) Vacuum Testing. At the option of the Contractor, vacuum testing of the installed manholes may be used instead of the leakage test. All pipes entering and exiting the manhole shall be temporarily plugged, taking care to securely brace the pipes and plugs to prevent them from being drawn into the manhole.

   The test head shall be placed at the top of the manhole and the seal inflated in accordance with the manufacturer's recommendations.

A vacuum of 10-inches of mercury shall be drawn on the manhole, the valve on the vacuum line of the test head shall be closed, and the vacuum pump shut-off. The time shall be measured for the vacuum to drop to 9-inches of mercury.

The manhole will be declared unacceptable if the time to drop from 10-inches of mercury to 9-inches of mercury is less than 60 seconds. This test interval is valid for 48" MH of up to 24' depth, 60" MH up to 18' deep and 72" MH up to 14' deep. The Town Engineer will establish test intervals for other situations on a case-by-case basis.

3.5.3 Television Inspection

The Developer shall perform television inspections of each segment of the sewer line and record this inspection on a CD, which is to be turned over to the Town. The format for labeling and stationing of this record is to be approved by the Town prior to performing the TV inspection. The Developer is to provide a one week notice prior to the TV inspection, so that a representative from the Town may be present to observe the inspection in progress. There shall be two TV inspections performed, one at the initial acceptance and one at the end of the two year warranty. The warranty inspection is to be performed no earlier than 22 months after acceptance of the sewer construction by the Town. The CD is to be submitted to the Town no later than 23 months after the date of Town acceptance. Performance of the two TV video inspections shall be completed at no cost to the Town.

3.5.4 Water Main Testing

All finished water lines, after reaction blocking is in place, shall be pressure and leakage tested at not less than 150 psi for a two-hour period. If working pressure is greater than 100 psi, the test shall be performed at 1.5 times the expected working pressure. Unless approved by the Engineer no lines longer than 1200' shall be tested at one time.

No pipeline installation will be acceptable until the leakage is less than the amount computed by the following formula:

$$L = \frac{\mathrm{SD(P)0.5}}{133{,}200}$$

Where:
L = Allowable leakage in gallons (per hour)
S = Tested length of pipe (feet)
D = Nominal diameter of pipe, inches
P = Average test pressure during the test, psi

3.5.5 Water Main Disinfection

All water piping shall be disinfected in accordance with AWWA C601 after all construction work has been completed. Chlorine shall be added to the water at the necessary locations in the amount to form a 50-ppm free chlorine residual. The chlorine solution shall be left in the pipelines for not less than 24 hours, during which time all valves and fire hydrants shall be operated in order to disinfect the appurtenances. After that length of time, the chlorine residual of the solution, at any place in the system, shall not be less than 10 ppm. All chlorination work must be done in the presence of the Engineer. At the end of 24 hours, a bacteriological test is to be performed by the local health authority to ensure adequate disinfection, at the cost of the Developer. Special provisions (at no additional cost to the Town) must be made to ensure any highly chlorinated water is not discharged to the ground. The Developer must submit the "method of disposal" for this chlorinated water prior to any testing.

SECTION 4
SERVICE LINE STANDARDS

SECTION 4

SERVICE LINE STANDARDS

4.1 GENERAL

No service line may be constructed without prior approval from the Town. The Applicant must provide adequate information describing the nature of the building or development to be connected, the proposed service line size, and the proposed connection point of the service line to the main. A site plan, showing the location of the proposed service line relative to other utilities on and adjacent to the property must be presented. The drawing must show the location of buildings served and parts of the site that are to be paved or otherwise intended to be kept clear of snow, and must also show service line slope and depth of cover over the service line.

The sizing of the service lines shall be the responsibility of the Applicant. When requested by the Town, the Applicant shall, at his expense, furnish data, plans, calculations, or other information as required for the evaluation of the service size. Service lines are the responsibility of the Developer or Applicant, who is responsible for design and construction and the costs thereof and for payment of actual costs of review and inspection provided by the Town.

All service lines are to be constructed in accordance with applicable codes, generally accepted good construction practices, and the minimum standards and criteria contained in this document. The details are provided for standardization purposes only, and represent minimum design standards which may require upgrading for specific applications.

No water service line shall be connected to a main which has not been pressure tested, disinfected and accepted by the Town.

4.2 OWNERSHIP AND MAINTENANCE

Ownership and maintenance responsibilities are defined under the following categories of Sewer Service, New Single-Family Detached Residential Water Service, Existing Single-Family Detached Residential Water Service and Commercial/Multifamily Water Service.

Sewer Service: The sewer service line is defined as beginning at the wye connection of the main line to the point of connection to the building(s) and is the property of the customer of the resident, unit or building served (see Drawing L1). Repairs, maintenance cleanings and pipe replacement of the service line are the responsibility of the customer.

New Single Family Detached Residential Water Service: A new single family detached residential water service is defined as a service constructed on or after January 1, 2011 in accordance with these standards and the details shown on Drawing L4. Starting at the property line the customer shall own and be responsible for maintenance and replacement of the service line and appurtenances including the stop and waste valve (curb stop), buried piping, internal piping, meter and meter box, valves, PRV and backflow preventer to the premise served. The stop and waste valve (curb stop) and meter box shall be located in a convenient, accessible

location and kept in good working order and clean of debris. Any meter or valve box not conforming to these maintenance standards shall be cleaned, repaired or replaced by the property owner. Failure by the property owner to comply may cause the Town to complete the required maintenance with the costs thereof billed to the owner. In addition, the Property Owner shall be responsible for the thawing of frozen service lines and appurtenances starting at the stop and waste valve to the premise served.

Existing Single Family Detached Residential Water Service: An existing single family detached residential water service is defined as a service constructed before January 1, 2011. If a property has a stop and waste valve located and installed in accordance with the details on Drawing L4, the customer, starting at the property line, shall own and be responsible for maintenance and replacement of the service line and appurtenances including the stop and waste valve (curb stop), buried piping, internal piping, meter and meter box, valves, PRV and backflow preventer to the premise served.

If a property does not have a private water system in accordance with the detail shown on Drawing L4, the service shall be considered non-conforming. Any repairs to a non-conforming water service line shall require the installation of a stop and waste valve A Pressure Reducing Valve (PRV) is not required at the time of the stop and waste installation; however, it is the responsibility of the property owner to maintain proper operating water pressures for individual water service. If a property has a non-conforming water system, the property owner shall own and be responsible for maintenance and replacement of the service line, and appurtenances including the corporation stop, stop and waste valve (curb stop), buried piping, internal piping, meter and meter box, valves, PRV and backflow preventer from the premise served to the corporation stop on the main line.,

The stop and waste valve and meter box shall be located in a convenient, accessible location and kept in good working order and clean of debris. Any meter or valve box not conforming to these maintenance standards shall be cleaned, repaired or replaced by the property owner. Failure by the property owner to comply may cause the Town to complete the required maintenance with the costs thereof billed to the owner.

The Town, depending on the on extent of ownership, shall be responsible for the replacement of Town improvements such as sidewalks, curb & gutter and roadway in repairing or replacing any service line (the replacement of private landscaping and fencing is not included). For non-conforming services, the property owner will be responsible for all Town improvement costs associated with a service repair of replacement.

The Town will not be responsible for the thawing of frozen service lines under private ownership.

Commercial/Industrial/Multifamily Water Service: Each individual Commercial or Industrial structure or Multifamily unit shall be served by separate service lines. At the discretion of the Town, depending on unit ownership, single lines serving Multifamily units may be allowed.

Typically separate lines shall be installed for fire suppression systems. The Town may allow combined service lines for potable use and fire suppression. Potable services must be isolated and protected from the fire suppression system as per these Standards defined in Section 5. . The Town assumes no obligation for the adequacy of private fire protection systems.

Water services ownership begins at the stop and waste valve if one is installed; or at the isolation valve if there is no stop and waste valve; or at the corporation stop on the mainline if there is no isolation valve or stop and waste valve. Starting at the point of ownership (corporation stop, isolation valve, or stop and waste valve) the customer shall own and be responsible for maintenance and replacement of the service line and appurtenances included buried piping, internal piping, meter and meter box or vault, valves, PRV and backflow preventer. The meter or meter box/vault shall be located in a convenient, accessible location and kept in good working order and clean of debris. Any meter or vault not conforming to these maintenance standards shall be cleaned, repaired or replaced by the property owner. Failure by the property owner to comply may cause the Town to complete the required maintenance with the costs thereof billed to the owner. In addition, the Town will not be responsible for the thawing of frozen lines and appurtenances under private ownership.

4.3 SERVICE CONNECTION

No connection between the sewer or water system of the Town and the service of the owner may be made except in a public street adequate to accommodate the sewer or water facilities or in a similar place to which the Town has as a free right of access as it would have in a public street.

Where parallel or approximately parallel to a structural wall, the service shall be at least 5' from the wall. Penetrations through structures shall be approximately at right angles and shall provide flexibility such that the service will not be damaged by settlement of the structures.

Water and sewer service lines shall have 10 feet minimum of horizontal separation. Where this separation is impractical, the Town may permit other separation requirements, in accordance with applicable standards. If a sewer service line passes over a water main or service, or if it lies within 10 feet of the water main or service, the service is to be modified as specified in Drawing G3.

The minimum cover shall be 6 feet from top of sewer service line to finished grade and 5 feet from top of water service line to finish grade.

The applicant for a service shall notify the Town when the service line is ready for connection to the public sewer or water main, and the connection shall not be made until after inspection and approval by the Town. The service line shall meet the requirements of the International Plumbing Code (IPC). The connection to the main shall be made in the presence of and approved by the Town Inspector. The trench of each service line must be open (not backfil1ed) from the building to the tap, to allow inspection by the Town prior to backfilling.

If practicable, pre-installed wye fittings shall be used for sewer service connections; otherwise the connection of the building sewer service to the main shall be made as follows: A saddle tee

shall be used to connect 4" or 6 sewer service lines to 8" to 15" sewer mains. No saddle wyes are allowed. The service line connection shall conform to the Drawing L1. To simplify later location of service connection points in plastic pipe, bury 1-2 pound piece of magnetic material within 12" of the joint and approx. 12" above.

Each sewer service line is to have a 4" cleanout installed within 20' of the building served, per Drawing L2. Cleanouts are required for any significant change in service line direction and at intervals of no greater than 90'.

Water services lines shall be laid at a uniform grade and in straight alignment. A reference mark shall be placed on the curb above the line.

4.4 SEWER SERVICE SIZING

The size and slope of the building service sewer shall be subject to the approval of the Town, but in no event shall the diameter be less than 4". Minimum grade and slopes shall be as follows:

4" .....2.0% Normal, 1.0% Minimum
6" 1.00%
8" 0.60%

4.5 WATER SERVICE SIZING

Sizing. Sizing for potable water services shall be made in general conformance with AWWA Manual M22, "Sizing Water Service Lines and Meters." When requested by the Town, the Applicant shall, at his expense, furnish data, plans, calculations, or other information as required for the evaluation of the service size.

Cross Connections. Cross connections of any type that permit a backflow condition from any source other than the Town's potable water mains are prohibited. The Town will not provide water service to any customer unless the potable water supply is protected from potential or actual cross connections as required in Section 5. . Each service shall include an approved back flow prevention device. All water services larger than 1-inch and all fire suppression systems shall include an approved backflow prevention device as defined in Section 5.

Pressure Regulation. A pressure reducing valve (PRV) is recommended. It is the responsibility of the property owner to maintain proper operating pressures, commonly not exceeding 70 psi, for the individual water service. If a PRV is installed, it shall be located upstream of all uses.

4.6 SEWER SERVICE MATERIALS AND INSTALLATION

Sewer service pipe shall be PVC, with a thickness not less than SDR 35. Sanitary Sewer Service Pipe shall be green or other acceptable color.

The line shall be water tight and on a constant grade in a straight line, and not closer than 5' from any bearing wall.

4.7 WATER SERVICE MATERIALS

Water Service Pipeline: The water service pipeline shall be Type K, soft copper conforming to ASTM 888, unless otherwise specifically approved by the Town. Fittings shall be brass or copper alloy. Connections shall be by flared joints and no soldered joints shall be permitted underground.

Corporation Stops: Corporation stops shall be used for the connection of services (2- inch and smaller) to the water main. Corporation stops shall be brass and conform with AWWA C800. The inlet shall be standard AWWA corporation stop inlet thread and the outlet shall be for compression type "K", 1" or less, copper service pipe. Corporation stops shall be Mueller H-15000, Ford F-600, or approved equal, provided with an insulating coupling for potable service.

Curb Stops: Curb stops (sometimes called "stop & waste boxes") shall be provided as detailed on Drawing L3 for all services. Curb stops shall be brass and conform with AWWA C800. Connections shall be for compression type " K copper service pipe. Curb stops shall be Mueller H-15204, Ford 8-22, or approved equal.

Service Saddles: Service saddles shall be used for all water taps on any pipe other than DIP (Ductile Iron Pipe). For DIP, 3/4" and 1"' taps may be made without using a service saddle on pipe 8" mains or larger. All other DIP taps shall be made with a double strap bronze saddle, Smith Blair No. 357, Rockwell No. 323 or approved equal.

Meters. Unless otherwise approved, water meters shall be housed in an exterior meter pit in accordance with the standard drawings. Meters shall be bronze case Sensus SR-II TR/LP with sealed register and touch read/pit lid adapters. Meter shall be set with a coppersetter having an integral angle curb valve on the inlet side. Coppersetter shall be Ford 80 series or approved equal.

Meter Pits. Meter pits shall be pre-cast polyethylene with minimum nominal wall thickness of 0.55-inches, vertical crush strength exceeding 20,000 lbs, white interior color and black exterior color manufactured by Mid-States Plastics or approved equal. Concrete pits (H20 traffic load rating) with stackable section is also acceptable.

Meter Pit Covers. Covers shall be constructed of cast iron with rubber or plastic inner frost lid. The top lid shall include a worm type lock operated by a pentagon head. The lid and cover shall be Ford Wabash No. W3 or approved equal. The top lid shall be tapped for mounting the touch read pad. Radio transmitting units maybe required by the Town. Pit locations in driveways and alleyways shall have covers rated for H20 traffic loading.

4.8 WATER SERVICE INSTALLATION

The service line connection shall be constructed as shown in Drawing L4.

All excavations for water service installations shall be adequately guarded with barricades and lights so as to protect the public from hazards. Utilities, streets, sidewalks, parkways, and other public or private property disturbed in the course of work shall be restored to their original condition in a manner satisfactory to the Town of Elizabeth or other affected owners or jurisdictions.

All excavations required for the installations of a water service shall be open-trench work, unless otherwise approved by the Town. The services shall be bedded and backfilled in accordance with the minimum cover and/or insulation requirements of Section 3. The bedding and pipe zone material within 12" of the water service line shall be select native soils with 3" max. diameter rock. Backfill materials shall be select native soils with 6" maximum diameter rock. If insulation is installed, use approximately 6" of sand or squeegee for the pipe zone materials above and beneath the insulation to protect it from breakage during backfill.

4.9 DOCUMENTATION

The Applicant shall submit a dimensioned sketch to the Town, showing the location of the point of connection, relative to visible and reasonably permanent surface features, such as building corners, property pins or power flight poles. As-built drawings of the entire system, including curb-stops, shall be required at system dedication and pursuant to the Town’s Municipal Code.

SECTION 5
BACKFLOW PREVENTION AND CROSS-CONNECTION CONTROL

SECTION 5

BACKFLOW PREVENTION AND CROSS-CONNECTION CONTROL

5.1 Purpose.

The purpose of backflow prevention and cross-connection control is to protect the Town of Elizabeth public potable water supply from the possibility of contamination or pollution by isolating or containing within the consumer's internal distribution system(s) or the consumer's private water system(s) such contaminants or pollutants that could backflow into the public water system;To promote the elimination or control of existing cross connections, actual or potential, between the consumer's in-plant/in-house potable water system(s) and non-potable water systems, plumbing fixtures, and industrial piping systems; and To provide for the maintenance of a continuing program of cross-connection control that will systematically and effectively prevent the contamination or pollution of the potable water system.

5.2 Definitions.

The definitions of terms used in this section are those contained in the Colorado Department of Health and Environment's Cross Connection Control Manual as the same may be amended from time to time, unless otherwise defined below:

"Active date" means the first day that a backflow prevention assembly or backflow prevention method is used to control a cross-connection in each calendar year.

"Air gap" is a physical separation between the free flowing discharge end of a potable water supply pipeline and an open or non-pressure receiving vessel installed in accordance with standard AMSE A112.1.2.

"Approved Backflow Device" A backflow device or air gap meeting the standards and installation requirements of the A.S.S.E. (American Society of Sanitary Engineers), the latest edition of the Colorado Department of Health and Environment's Colorado Cross Connection Control Manual and/or the requirements of these standards. Approval by the Town will be dependent upon the hazard(s) assessed, but shall not be less than the Colorado Department of Health and Environment's Colorado Cross Connection Control Manual requirements for potable water system protection. "Approved" status shall also be contingent on inspection, testing and passing of such test by a Certified Cross Connection Control Technician. Any variation or exception may be by direction from the current edition of the Colorado Department of Health and Environment's Colorado Cross Connection Control Manual.

"Backflow" means the undesirable reversal of flow of water or mixtures of water and other liquids, gases or other substances into the public water distribution system from any source or sources other than its intended source.

"Backflow contamination event" means backflow into the public water system from an uncontrolled cross connection such that the water quality no longer meets the Colorado primary Drinking Water Regulations or presents an immediate health and/or safety risk to the public.

"Backflow prevention assembly" means any mechanical assembly installed at a water service line or at a plumbing fixture to prevent a backflow contamination event, provided that the mechanical assembly is appropriate for the identified contaminant at the cross connection and is an in-line field-testable assembly.

"Backflow prevention method" means any method and/or non-testable device installed at a water service line or at a plumbing fixture to prevent a backflow contamination event, provided that the method or non-testable device is appropriate for the identified contaminant at the cross connection.

"Certified cross-connection control technician" means a person who possesses a valid Backflow Prevention Assembly Tester certification from one of the following approved organizations: American Society of Sanitary Engineering (ASSE) or the American Backflow Prevention Association (ABPA). If a certification has expired, the certification is invalid.

"Containment" means the installation of a backflow prevention assembly or a backflow prevention method at any connection to the public water system that supplies an auxiliary water system, location, facility, or area such that backflow from a cross connection into the public water system is prevented.

"Containment by isolation" means the installation of backflow prevention assemblies or backflow prevention methods at all cross connections identified within a customer's water system such that backflow from a cross connection into the public water system is prevented.

"Controlled" means having a properly installed, maintained, and tested or inspected backflow prevention assembly or backflow prevention method that prevents backflow through a cross connection.

"Cross connection" means any connection that could allow any water, fluid, or gas such that the water quality could present an unacceptable health and/or safety risk to the public, to flow from any pipe, plumbing fixture, or a customer's water system into a public water system's distribution system or any other part of the public water system through backflow.

"Multi-family" means a single residential connection to the public water system's distribution system from which two or more separate dwelling units are supplied water

"Service Connection" The terminal end of the water supplier service connection from the Town's potable water distribution system to the threads on the curb stop if present, or corporation stop on water main line, where the Water Department loses jurisdiction and sanitary control and consumer ownership begins. "Service connection" shall also include water service connection from a fire hydrant and all other temporary or emergency water service connections from the Town's potable water system.

"Single-family" means:

i. A single dwelling which is occupied by a single family and is supplied by a separate service line; or

ii. A single dwelling comprised of multiple living units where each living unit is supplied by a separate service line.

"*Uncontrolled*" means not having a properly installed, maintained and tested or inspected backflow prevention assembly or backflow prevention method, or the backflow prevention assembly or backflow prevention method does not prevent backflow through a cross connection.

"Thermal Expansion" Increase in linear dimensions of a solid or in volume of a fluid because of rise in temperature

"Water supply system" means a water distribution system, piping, connection fittings, valves and appurtenances within a building, structure, or premises. Water supply systems are also referred to commonly as premise plumbing systems.

5.3 Authority.

(1) The authority for the Town to implement this program is contained in the following statute, legislation and regulations and acts:

a. Article 1-114 and Article 1-114.1 of Title 25 of the Colorado Revised Statutes (CRS)

b. Section 39 of 5 CCR 1002-11, Colorado Primary Drinking Water Regulations (Regulation 11) Effective date May 1, 2015

c. Colorado Plumbing Code

d. International Plumbing Code

The Town shall have the authority to survey all service connections within the distribution system to determine if the connection is a cross-connection.

The Town shall have the authority to control all service connections within the distribution system if the connection is a cross-connection.

The Town may control any service connections within the distribution system in lieu of a Cross Connection Survey as long as the service connection is controlled with a Reduced Pressure Zone (RPZ) backflow prevention assembly that is annually tested.
The Town may collect fees for the administration of this program.

The Town shall maintain records of cross-connection surveys and the installation, testing and repair of all backflow prevention assemblies installed for containment and containment by isolation purposes.

Except as otherwise provided herein, the Town shall administer, implement and enforce the provisions of this Section.

5.4 Applicability.

This Section applies to all commercial, industrial and multi-family residential service connections (Non-Single Family Residential) within the Town water system and to any persons outside the Town who are, by contract or agreement with the Town, users of the Town water system. This Section may apply to single-family-residential service connections if the Town becomes aware of, or suspects a possible cross connection at the single family connection.

5.5 General Policy.

The Town shall be responsible for the protection of the Town's potable water distribution system from contamination or pollution due to the backflow of contaminants or pollutants through water service connections. If, in the judgment of the Town, an approved backflow-prevention assembly is required at the consumer's water service connection; or, within the consumer's private water system for the safety of the water system, the Town shall give notice in writing to said consumer to install such an approved backflow prevention assembly(s) at specific location(s) on his/her premises. The consumer shall install such approved assembly(s) within the time frame set forth in the notice and at his/her own expense; and, failure, refusal, or inability of the consumer to install, have tested, and maintain said assembly(s) shall constitute grounds for discontinuing water service to the premises until such requirements have been satisfactorily met.

5.6 Requirements.

(a) Commercial, industrial and multi-family service connections shall be subject to a survey for cross connections. If a cross connection has been identified an appropriate backflow prevention assembly and or method shall be installed at the customer's water service connection within 120 days of its discovery. The assembly shall be installed downstream of the water meter or as close to that location as deemed practical by the Town. If the assembly or method cannot be installed within 120 days the Town must take action to control or remove the cross connection, suspended service to the cross connection or receive an alternative compliance schedule from the Colorado Department of Public Health and Environment. At the consumers expense all new connections requiring a backflow device shall be inspected and tested by a Certified Cross Connection Control Technician.

(b) Changes in Service. Any changes in service including, but not limited to, reconnection, change in the number of fixture values, or change in the type of water service, shall require installation of an approved backflow device.

In no case shall it be permissible to have connections or tees between the meter and the containment backflow prevention assembly. In instances where a reduced pressure principle backflow preventer cannot be installed, the owner must install approved backflow prevention devices or methods at all cross-connections within the owner's plumbing system.

(c) Backflow prevention assemblies and methods shall be installed in a location which provides access for maintenance, testing and repair.

(d) Reduced pressure principle backflow preventers shall not be installed in manner subject to flooding.

(e) Provisions shall be made to provide adequate drainage from the discharge of water from reduced pressure principle backflow prevention assemblies. Such discharge shall be conveyed in a mater which does not impact waters of the state.

(f) All assemblies and methods shall be protected to prevent freezing. Those assemblies and methods used for seasonal services may be removed in lieu of being protected from freezing. The assemblies and methods must be reinstalled and then tested by a certified cross-connection control technician upon reinstallation.

(g) Where a backflow prevention assembly or method is installed on a water supply system using storage water heating equipment such that thermal expansion causes an increase in pressure, a device for controlling pressure shall be installed.

(h) All backflow prevention assemblies shall be tested at the time of installation and on an annual schedule thereafter. Such tests must be conducted by a Certified Cross-Connection Control Technician.

(i) The Town shall require inspection, testing, maintenance and as needed, repairs and replacement of all backflow prevention assemblies and methods, and of all required installations within the owner's plumbing system in the cases where containment assemblies and or methods cannot be installed.

(j) All costs for design, installation, maintenance, testing and as needed repair and replacement are to be borne by the customer.

(k) No grandfather clauses exist except for fire sprinkler systems where the installation of a backflow prevention assembly or method will compromise the integrity of the fire sprinkler system.

(l) New water system connection and/or new building to the Town water system must have the following: plans submitted to the public water system and approved prior to the issuance of water service. Building plans must show:

1) Water service type, size and location
2) Meter size and location
3) Types of water use at the property
4) Backflow prevention assembly size, type and location

5) Fire sprinkler system(s) service line, size and type of backflow prevention assembly.

a) All fire sprinkling lines shall have a minimum protection of an approved double check valve assembly for containment of the system.
b) All glycol (ethylene or propylene), or antifreeze systems shall have an approved reduced pressure principle backflow preventer for containment.
c) Dry fire systems shall have an approved double check valve assembly installed upstream of the air pressure valve.
d) In cases where the installation of a backflow prevention assembly or method will compromise the integrity of the fire sprinkler system the Town can chose to not require the backflow protection. The Town will measure chlorine residual at a location representative of the service connection once a month and perform periodic bacteriological testing at the site. If the Town suspects water quality issues the Town will evaluate the practicability of requiring that the fire sprinkler system be flushed periodically.

e) At the consumers expense all new connections requiring a backflow device shall be inspected and tested by a Certified Cross Connection Control Technician.

f) Variance. Upon written application by the consumer to the Colorado Department of Public Health and Environment (CDPHE) Water Quality Control Division (WQCD), the Town may vary from this requirement.

5.7 Installation.

Installation of backflow prevention assembly in compliance with this Section is a condition to receiving water service from the Town. All connections to the municipal water system, including all existing connections, shall conform or be brought into conformance with the following requirements:

a. Backflow prevention assemblies installed in violation of this Section shall be removed and replaced at the water customer's expense. Any such repair or replacement shall be made with an approved backflow prevention assembly within ten (10) days of discovery by the user, a certified technician, or the Town and/or its designee, unless arrangements satisfactory to the Town are made. Should the hazard presented to the water system be determined to present a significant health risk, immediate service discontinuance may be necessary until such repair or replacement is accomplished.
b. Backflow prevention assemblies shall be installed in a safe and accessible location to facilitate maintenance, testing, repair and drainage in accordance with all applicable codes and regulations. No backflow prevention assembly shall be installed in a pit, vault or location where toxic gases are present. No backflow prevention assembly shall be installed over electrical lines or other equipment where water could cause a hazard.

c. Containment backflow prevention assemblies shall be installed immediately downstream of the water meter, prior to any service connections, in compliance with all applicable codes and regulations.
d. Access for inspection, testing, repair, maintenance and/or replacement of backflow prevention assemblies that serve more than one (1) property, such as a master-metered facility, shall not be contingent on access of a private residence or business. Such installations shall be located in an area accessible from the exterior, such as a mechanical room or an ASSE 1060-certified enclosure that is protected against freezing and meeting all installation criteria identified herein.
e. Before installing a backflow prevention assembly, pipelines shall be thoroughly flushed to remove foreign material.
f. Thermal expansion equipment shall be installed on all water systems contained by a backflow prevention assembly.
g. Backflow prevention assembly valves shall not be used as the inlet or outlet valve of the water meter. Test cocks shall not be used as supply connections.
h. All costs for design, installation, maintenance, repair and testing shall be borne by the utility customer.

5.8 Testing and maintenance.

Backflow prevention assemblies shall be tested and maintained as described below:

a. Backflow prevention assembly testing shall be conducted by a Certified Cross Connection Control Technician using the latest test procedures as specified by one of the following councils (A.S.S.E., A.B.C., A.B.P.A).
b. All backflow prevention assemblies shall be tested by a certified technician at the time of installation, prior to issuance of a certificate of occupancy.
c. Backflow prevention assemblies shall be tested immediately upon installation, repair, replacement or alteration of plumbing upstream of the assembly.
d. The Town retains the right to test or otherwise check the installation and operation of any testable assembly at any time to assure proper operation at the property customer’s expense.
e. Should a backflow prevention assembly not be installed in conformance with Town standards, the test report shall reflect such information and be recorded as a failure.
f. All backflow prevention assemblies not meeting requirements shall be repaired or replaced at the water customer's expense. Any such repair or replacement shall be made with an approved backflow prevention assembly within ten (10) days of discovery by the user, a certified technician or the Department and/or its designee, unless arrangements satisfactory to the Department and/or its designee are made. Should the hazard presented to the water system be determined to present a significant health risk, immediate service discontinuance may be necessary until such repair or replacement is accomplished.

5.9 Record keeping.

a. The certified technician shall report on a form approved by the Town
b. Records of all tests, inspections, repairs and replacements of backflow prevention assemblies shall be kept by the water customer, the certified technician and the Town for a period of three (3) years.
c. The certified technician is required to send copies of all passed test reports to the owner and the Town within ten (10) business days after testing, inspecting or repairing any backflow prevention assembly. The certified technician should repair a failed assembly immediately, if possible. When an assembly failure is a potential threat to the potable water system or the environment and cannot be repaired immediately, the certified technician must report the failure verbally to the owner and the Town and/or its designee. The technician must send written notification to the owner and the Town and/or its designee within three (3) working days.

d. Copies of records of test reports, repairs and retests shall be submitted to the Town by mail or e-mail by the testing company or testing technician. Information on test reports shall include, but may not be limited to:

1. Test reports to be provided on company letter head
2. Company information (name, address, phone number)
3. Assembly or method type
4. Assembly or method location address (For multiple businesses on a single protection device, list on the report each business name and address information for each protected)
5. Assembly make, model and serial number
6. Assembly size
7. Test date and results including all results that would justify a pass or fail outcome.
8. Certified cross-connection control technician certification agency
9. Technician's name
10. Technician's certification number
11. Technician's certification expiration date
12. Test kit manufacturer, model and serial number
13. Test kit calibration date

5.10 Right of entry.

a. The Town representative and/or his or her designee assigned to inspect premises relative to possible hazards shall carry proper credentials of his or her office and, upon exhibit of which, said representative shall have the right of entry to inspect any and all buildings and premises for cross-connections in the performance of his or her duties. If such entry is refused, the Town administrative authority or the designated authorized representative thereof shall have recourse to every remedy provided by law to secure entry.

b. This right of entry shall be a condition of water service in order to provide assurance that the health, safety and welfare of the people throughout the Town's potable water distribution system are maintained. Where building security is required, the backflow assembly or assemblies should be located in an area not subject to security. Questions regarding proper credentials should be directed to the Town.

5.11 Compliance.

a. Customers shall cooperate with the installation, inspection, testing, maintenance, and as needed repair and replacement of backflow prevention assemblies and with the Cross Connection Survey process. For any identified uncontrolled cross-connections, the Town will complete one of the following actions within sixty (60) days of its discovery:

    1. Control the cross connection
    2. Remove the cross connection
    3. Suspend service to the cross connection

b. Service of water to any premises may be discontinued by the Town if unprotected cross-connections exist on the premises, if any defect is found in an installed backflow prevention assembly or if a backflow prevention assembly has been removed or bypassed. Service shall not be restored until such conditions or defects are corrected.

c. Discontinuance of service may be summary, immediate and without written notice whenever, in the judgment of the Town Administrator or the designated representative thereof, upon the recommendation of the Town or a registered certified cross-connection control technician, such action is necessary to protect the purity of the public potable water supply or the safety of the water system.

d. Suspended Disconnection. At the Town's discretion, severing the service connection will be performed if degree of hazard warrants such action in order to protect the Town's potable water supply. Discontinuance of service may be summary, immediate, and without written notice whenever, in the judgment of the Town, such action is necessary to protect the Town's potable water supply or the distribution system.

e. The Town will give notice in writing to any owner whose plumbing system has been found to present a risk to the public waters system's distribution system through an uncontrolled cross connection. The notice and order shall state that the owner must install a backflow prevention assembly or method at each service connection to the owner's premises to contain the water service. The notice and order will give a date by which the owner must comply.

5.12 Requirements of the Consumer.

(a) All "Non-Single Family Residential" consumers must complete and submit a Cross Connection Survey to the Town, unless, they have a reduced pressure zone (RPZ) Backflow Prevention Assembly that is tested annually.

(b) Cross-Connection(s). The consumer shall be responsible for the elimination or protection of all cross-connections (known or unknown by the Town) on his/her premises by an approved backflow device at his/her expense. Such backflow device expenses shall include installation, maintenance, protection, testing, repair, removal or replacement of said device(s) as required by the Town as a condition of service.

(c) Any consumer determined by the Town to be an "Unacceptable Health and/or Safety Risk" shall have an acceptable (for the level of risk) backflow assembly installed and tested annually. All test reports shall be submitted to the Town.

(d) The consumer or those occupying any premise shall not bypass, disable, remove, or modify any backflow device without written consent by the Town. Any such modifications shall result in termination of service.

(e) The consumer or those designated by him or her shall comply with current N.F.P.A. standards and/or the current Town Standards, as amended, when designing, installing and maintaining any fire suppression system as a condition of service. The Consumer and/or those whom are designated for the design and installation of the system will need to provide verification of approval by the Elizabeth Fire District.

5.13 Plan approval.

All building and/or construction plans involving water/sewer service, plumbing plans for additions or alterations to existing plumbing systems, and/or irrigation system installation submitted to the Town at owner's expense, shall be reviewed by the Town and/or its designee and approved prior to issuance of a permit.

5.14 Fees.

The Board of Trustees may establish and adopt a schedule of fees to be paid by the developer/builder to defray the expenses of the Town in reviewing plans and/or inspecting work. Further, the Town may charge a reasonable fee for copies of any documents.

5.15 Violations and Penalties.

Any person, whether as principal, agent, employee or otherwise, who violates any of the provisions of Section 5 of these Standards shall be subject to the general penalties as set forth in Section 1-4-20 of the Town Code.

STANDARD DETAILS

STANDARD DETAILS - GENERAL

THESE DESIGNS, PLANS, AND CONTRACT DOCUMENTS ARE REVIEWED FOR CONCEPT AND GENERAL CONFORMANCE TO THE TOWNS' MINIMUM STANDARDS ONLY, AND THE PRIMARY RESPONSIBILITY FOR DESIGN ADEQUACY IS TO REMAIN WITH THE ENGINEER OF RECORD. THIS REVIEW DOES NOT IMPLY RESPONSIBILITY BY THE TOWN OF ELIZABETH, OR THE TOWN ENGINEER FOR COMPLETENESS, ACCURACY OR CORRECTNESS OF CALCULATION. THE REVIEW DOES NOT IMPLY THAT QUANTITIES OF ITEMS INDICATED ON THE PLANS ARE THE FINAL QUANTITIES REQUIRED. THE REVIEW SHALL NOT BE CONSTRUED FOR ANY REASON AS ACCEPTANCE OF FINANCIAL RESPONSIBILITY BY THE TOWN FOR ADDITIONAL ITEMS AND ADDITIONAL QUANTITIES OF ITEMS SHOWN THAT MAY BE REQUIRED DURING THE CONSTRUCTION PHASE.

APPROVED FOR CONSTRUCTION WITHIN ONE YEAR OF THE EARLIEST OF THESE DATES:

BY _____ _____

TOWN ENGINEER — DATE

BY _____ _____

TOWN OF ELIZABETH-PUBLIC WORKS DIRECTOR — DATE

BY _____ _____

TOWN OF ELIZABETH-TOWN ADMINISTRATION — DATE

BY _____ _____

ELIZABETH FIRE DEPARTMENT — DATE

TOWN OF ELIZABETH	
STANDARD APPROVAL BLOCK	
SCALE: NTS	DATE: APRIL 2025
LAST REVISED: FEBRUARY 2017	G1
WATER AND SEWER STANDARDS	

6/22/11 07:55 CON56869 R17 T:\DRAWINGS\PROJECTS\ELIZ\STANDARD DETAILS\DETAILS\G1-STANDARD APPROVAL BLOCK.DWG IMAGES: N:\BUSINESS DEVELOPMENT\CLIENT\COLORADO MUNIS, COUNTIES & DISTRICTS\ELIZABETH\TOWN LOGO.JPG;

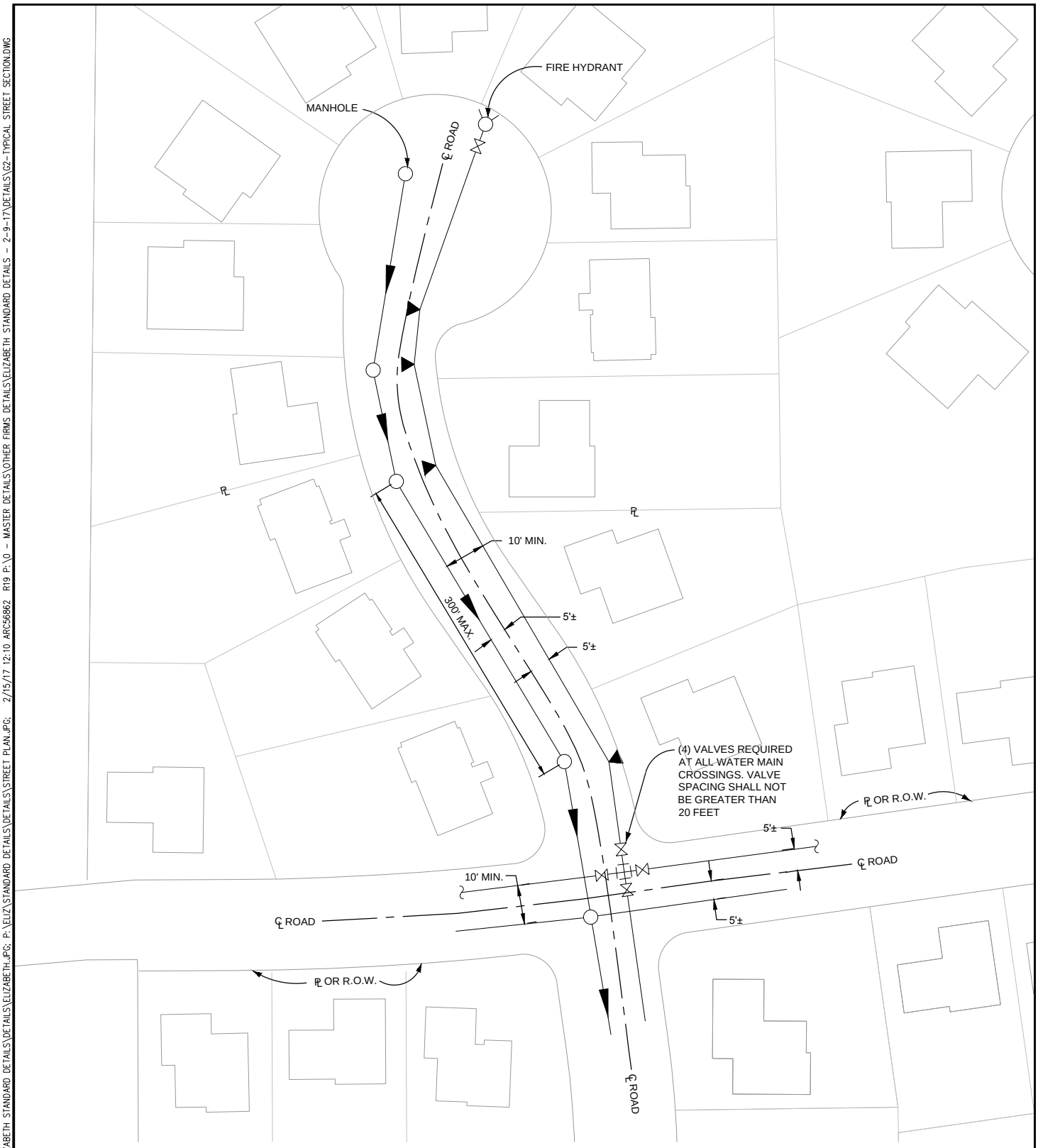

TOWN OF ELIZABETH

TYPICAL WATER AND SEWER STREET PLAN

SCALE: NTS	DATE: APRIL 2025
LAST REVISED: FEBRUARY 2017	G2
WATER AND SEWER STANDARDS	

IMAGES: P:\0 - MASTER DETAILS\OTHER FIRMS DETAILS\ELIZABETH STANDARD DETAILS\DETAILS\ELIZABETH.JPG; P:\ELIZ\STANDARD DETAILS\DETAILS\STREET PLAN.JPG; 2/15/17 12:10 ARC58862 R19 P:\0 - MASTER DETAILS\OTHER FIRMS DETAILS\ELIZABETH STANDARD DETAILS - 2-9-17\DETAILS\G2-TYPICAL STREET SECTION.DWG

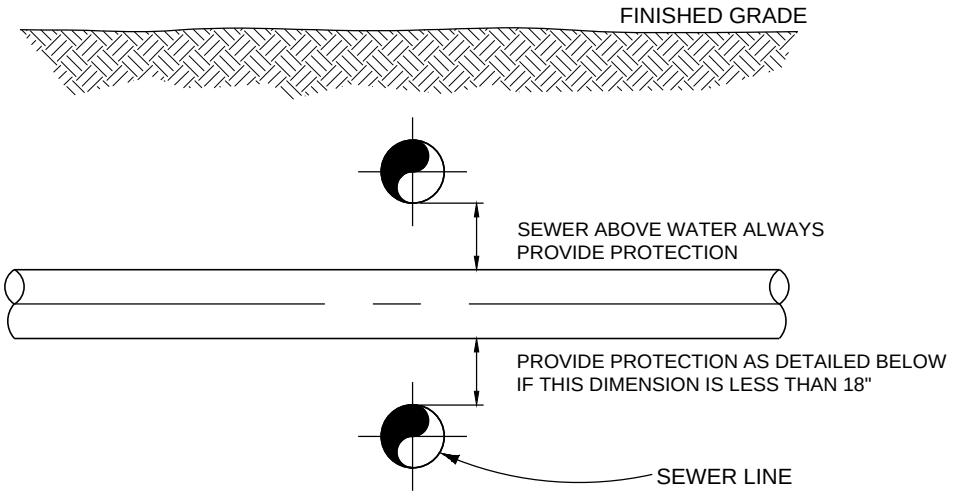

SECTION

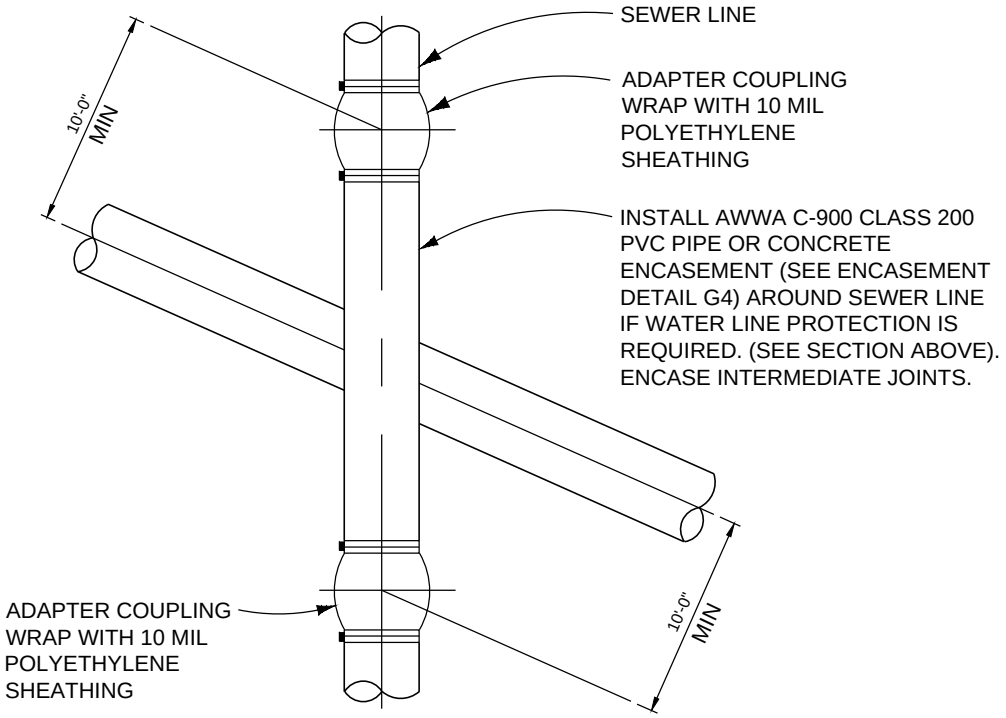

PLAN

TOWN OF ELIZABETH

SEWER AND
WATER LINE CROSSING

SCALE: NTS	DATE: APRIL 2025
LAST REVISED: FEBRUARY 2017	G3
WATER AND SEWER STANDARDS	

2/9/17 14:33 ARC56862 R19 P:\0 - MASTER DETAILS\OTHER FIRMS DETAILS\ELIZABETH STANDARD DETAILS - 2-9-17\DETAILS\G3-SEWER CROSSING WATERLINE DETAIL.DWG IMAGES: P:\0 - MASTER DETAILS\OTHER FIRMS DETAILS\ELIZABETH STANDARD DETAILS\DETAILS\ELIZABETH..JPG;

2/9/17 14:40 ARC56862 R19 P:\0 - MASTER DETAILS\OTHER FIRMS DETAILS\ELIZABETH STANDARD DETAILS - 2-9-17\DETAILS\G4-PIPE ENCASEMENT.DWG IMAGES: P:\0 - MASTER DETAILS\OTHER FIRMS DETAILS\ELIZABETH STANDARD DETAILS\DETAILS\ELIZABETH.JPG;

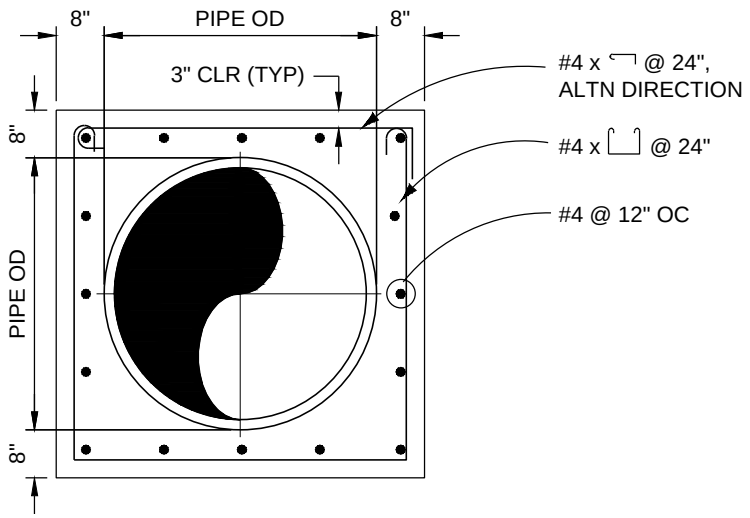

NOTES:

1. FOR TIE-INS TO STRUCTURES EXTEND LONGITUDINAL REINFORCING INTO WALL OR SLAB, PROVIDE DOWELS AT EACH END.

2. PROVIDE TWO FLEXIBLE JOINTS WITHIN SIX FEET OF EACH END OF ENCASEMENT.

3. USE GR 40 REINF. BARS.

4. CONCRETE SHALL HAVE A MINIMUM COMPRESSION STRENGTH OF 3,000 psi AT 28 DAYS

TOWN OF ELIZABETH	
CONCRETE ENCASEMENT	
SCALE: NTS	DATE: APRIL 2025
LAST REVISED: FEBRUARY 2017	G4
WATER AND SEWER STANDARDS	

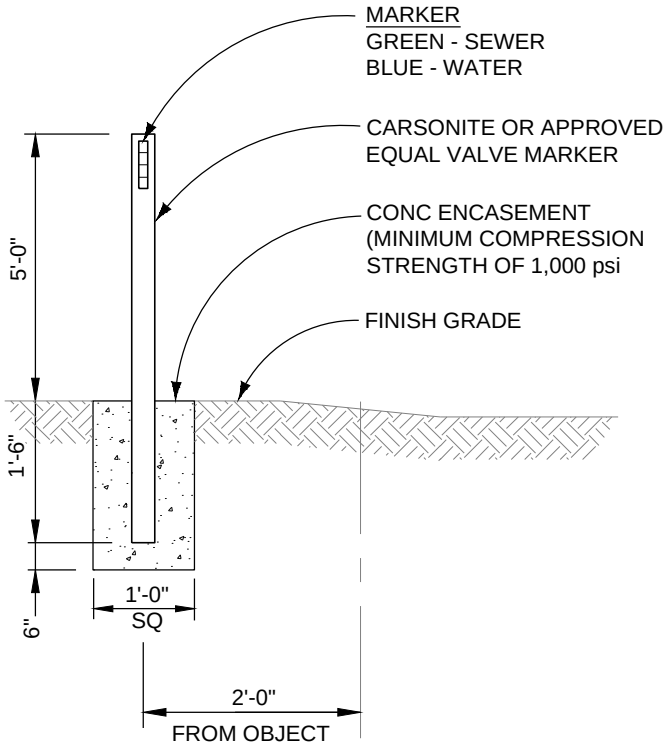

TOWN OF ELIZABETH

SURFACE MARKER

SCALE: NTS	DATE: APRIL 2025
LAST REVISED: FEBRUARY 2017	G5
WATER AND SEWER STANDARDS	

2/9/17 15:00 ARC56862 R19 P:\0 - MASTER DETAILS\OTHER FIRMS DETAILS\ELIZABETH STANDARD DETAILS - 2-9-17\DETAILS\G5-SURFACE MARKE.DWG IMAGES: P:\0 - MASTER DETAILS\OTHER FIRMS DETAILS\ELIZABETH STANDARD DETAILS\DETAILS\ELIZABETH..JPG;

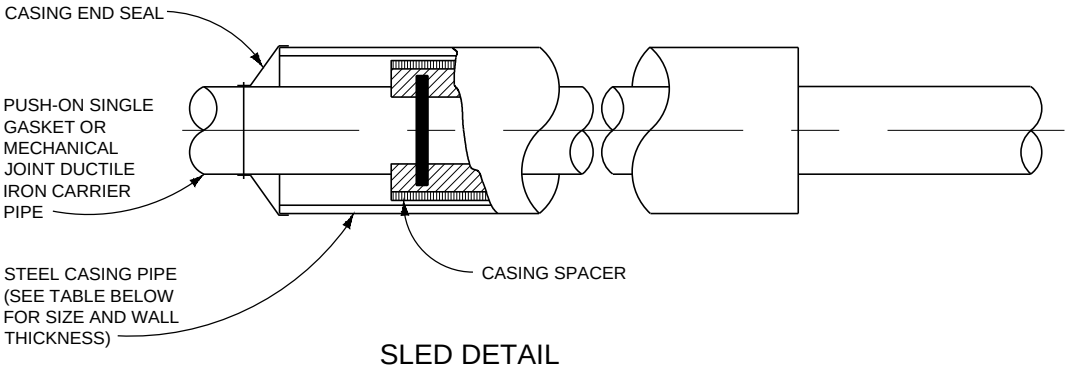

SLED DETAIL

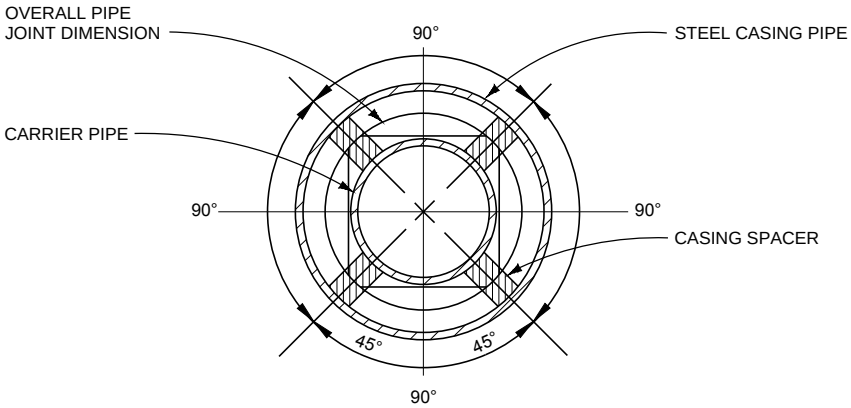

PIPE CASING DETAIL

CARRIER PIPE NOMINAL DIA.	CASING PIPE	
	MIN. O.D.	MIN. WALL THICK
4"	12"	0.188"
6"	16"	0.250"
8"	18"	0.282"
12"	22"	0.344"
16"	28"	0.406"
20"	32"	0.469"

NOTES:
1. NEOPRENE OR PVC RUNNERS MAY BE USED FOR CASING SPACERS.
2. TRENCH LAID CASINGS SHALL BE DESIGNED AND INSTALLED TO CONDUIT STANDARDS.
3. USE HARNESS LUGS FOR WATER MAIN RESTRAINT (SEE DWG G7).

TOWN OF ELIZABETH

BORE CASING

SCALE: NTS | DATE: APRIL 2025

LAST REVISED: FEBRUARY 2017

WATER AND SEWER STANDARDS

G6

2/9/17 15:06 ARC56862 R19 P:\0 - MASTER DETAILS\OTHER FIRMS DETAILS\ELIZABETH STANDARD DETAILS - 2-9-17\DETAILS\G6-BORE CASING.DWG IMAGES: P:\0 - MASTER DETAILS\OTHER FIRMS DETAILS\ELIZABETH STANDARD DETAILS\DETAILS\ELIZABETH.JPG;

2/9/17 15:16 ARC56862 R19 P:\0 - MASTER DETAILS\OTHER FIRMS DETAILS\ELIZABETH STANDARD DETAILS - 2-9-17\DETAILS\G7-HARNESS LUG.DWG IMAGES: P:\0 - MASTER DETAILS\OTHER FIRMS DETAILS\ELIZABETH STANDARD DETAILS\DETAILS\ELIZABETH.JPG;

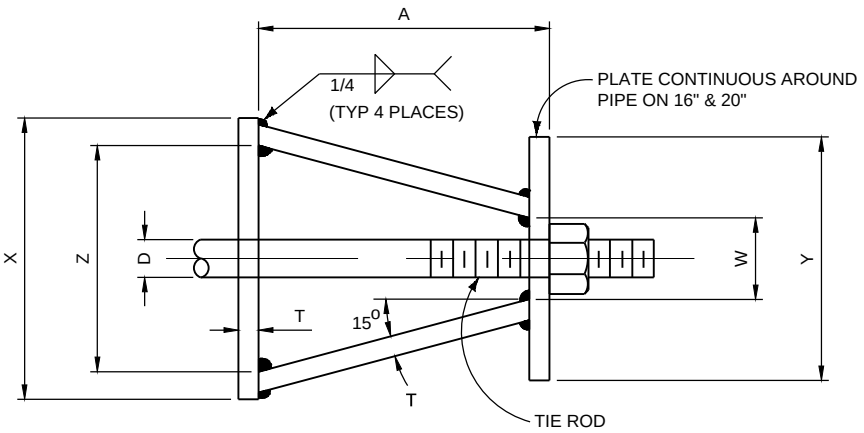

TOP VIEW

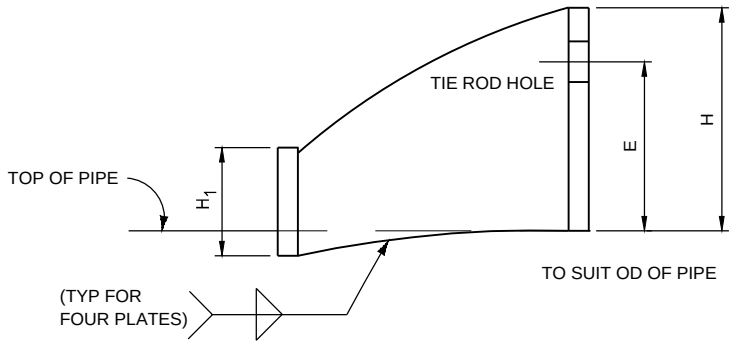

SIDE VIEW

	CARRIER PIPE NOMINAL DIA.	STUD DIA. D	A	W	Z	T	H	E	H_1	Y	X
W/O FLANGED LUGS	4" TO 12"	3/4"	5"	1-1/2"	3-3/4"	3/8"	4-1/8"	3-1/8"	2"	4-1/2"	5"
	16"	1"	5-3/4"	1-3/4"	4-1/2"	1/2"	4-1/2"	3-1/4"	2"	RING	6"
	20"	1-1/4"	7-1/2"	2"	5-3/4"	5/8"	5"	3-3/4"	2-1/2"	RING	7-1/2"

NOTES:

1. USE TWO HIGH STRENGTH STAINLESS STEEL TIE RODS AT END OF CASING.
2. TIE ROD HOLE DIAMETER 1/8" LARGER THAN STUD DIAMETER.
3. BOTTOM EDGE OF ALL PLATES SHAPED TO FIT OD OF PIPE.
4. HARNESS LUGS AS PER AWWA MANUAL M-II.
5. WARP W/ 10 MIL POLYETHYLENE SHEATHING.

TOWN OF ELIZABETH

HARNESS LUGS -
BORE CASING

SCALE: NTS | DATE: APRIL 2025

LAST REVISED: FEBRUARY 2017

WATER AND SEWER STANDARDS

G7

STANDARD DETAILS – SEWER SYSTEM

2/9/17 15:27 ARC56862 R19 P:\0 - MASTER DETAILS\OTHER FIRMS DETAILS\ELIZABETH STANDARD DETAILS - 2-9-17\DETAILS\S1-PIPE TRENCH_SEWER.DWG IMAGES: P:\0 - MASTER DETAILS\OTHER FIRMS DETAILS\ELIZABETH STANDARD DETAILS\DETAILS\ELIZABETH.JPG;

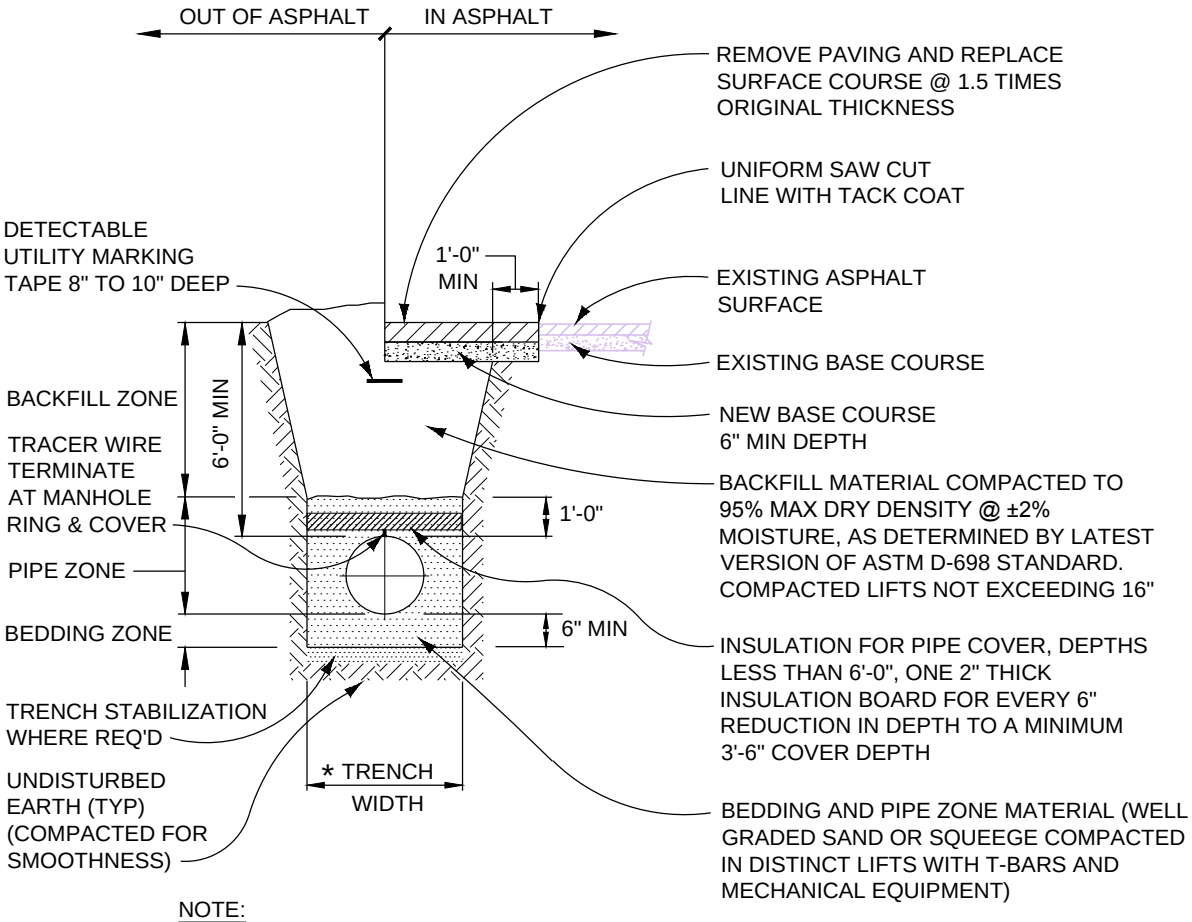

NOTE:
1. TRENCH SHALL CONFORM TO OSHA STANDARDS.

* MAXIMUM TRENCH WIDTH = 24" + NORMAL PIPE DIAMETER

TOWN OF ELIZABETH	
SEWER PIPE TRENCH	
SCALE: NTS	DATE: APRIL 2025
LAST REVISED: FEBRUARY 2017	S1
WATER AND SEWER STANDARDS	

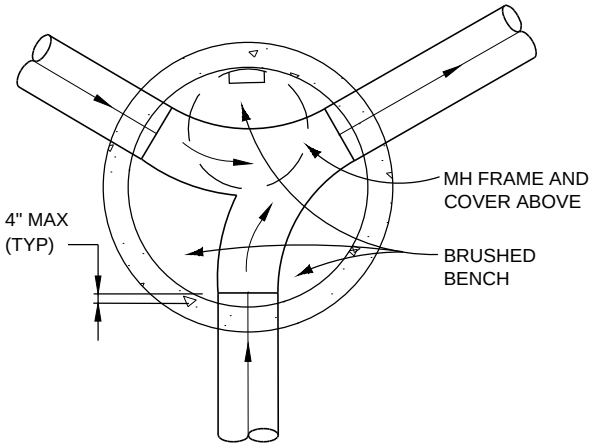

TYPICAL PLAN

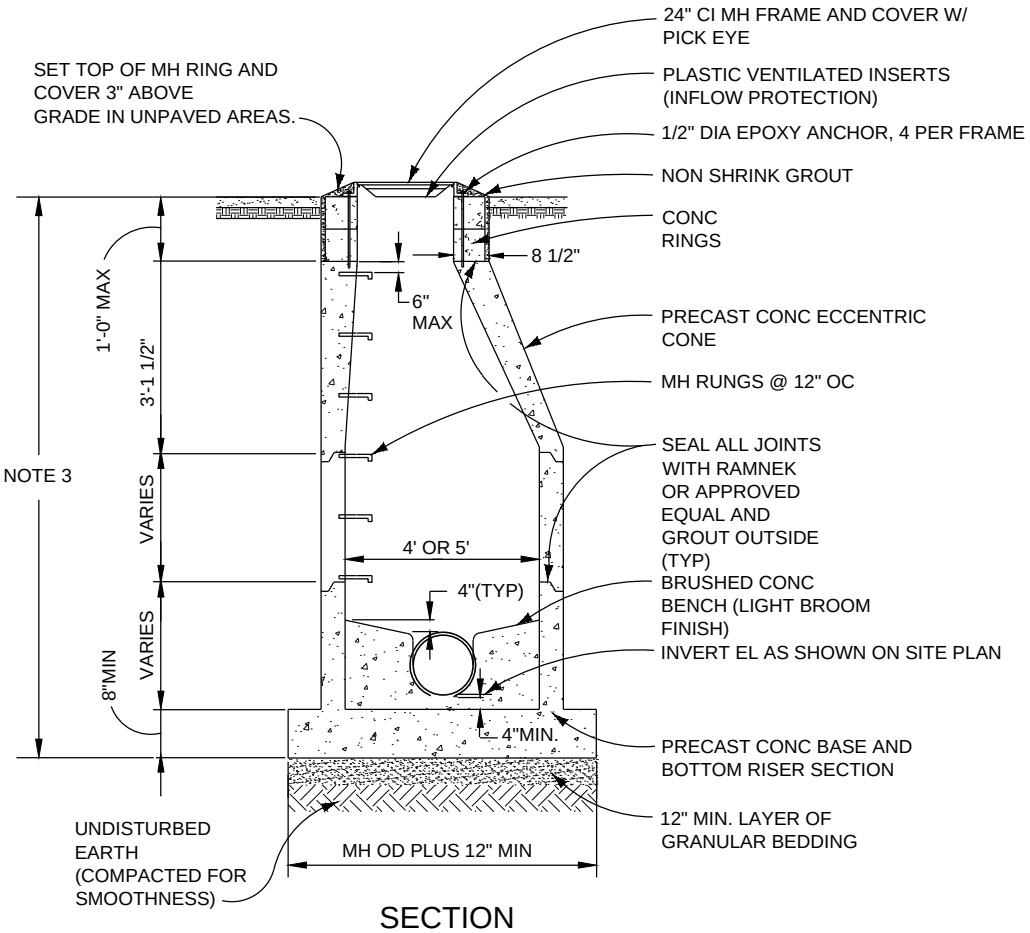

SECTION

NOTES:

1. ALL COMPONENTS SHALL BE CAPABLE OF HS-20 LOADING.
2. INSTALL ALL PIPES INTO MANHOLES WITH FLEXIBLE PIPE-TO-MANHOLE CONNECTORS.
3. USE PRECAST FLAT TOP COVER FOR SEWER DEPTHS LESS THAN 6'-0" (SEE DWG. S4).

TOWN OF ELIZABETH	
STANDARD MANHOLE	
SCALE: NTS	DATE: APRIL 2025
LAST REVISED: FEBRUARY 2017	S2
WATER AND SEWER STANDARDS	

2/13/17 18:04 ARC56862 R19 P:\0 - MASTER DETAILS\OTHER FIRMS DETAILS\ELIZABETH STANDARD DETAILS - 2-9-17\DETAILS\S2-MANHOLE WITH FORMED BENCH.DWG IMAGES: P:\0 - MASTER DETAILS\OTHER FIRMS DETAILS\ELIZABETH STANDARD DETAILS\DETAILS\ELIZABETH.JPG;

2/13/17 18:04 ARC56862 R19 P:\0 - MASTER DETAILS\OTHER FIRMS DETAILS\ELIZABETH STANDARD DETAILS - 2-9-17\DETAILS\S3-MANHOLE WITH FORMED BENCH.DWG IMAGES: P:\0 - MASTER DETAILS\OTHER FIRMS DETAILS\ELIZABETH STANDARD DETAILS\DETAILS\ELIZABETH.JPG;

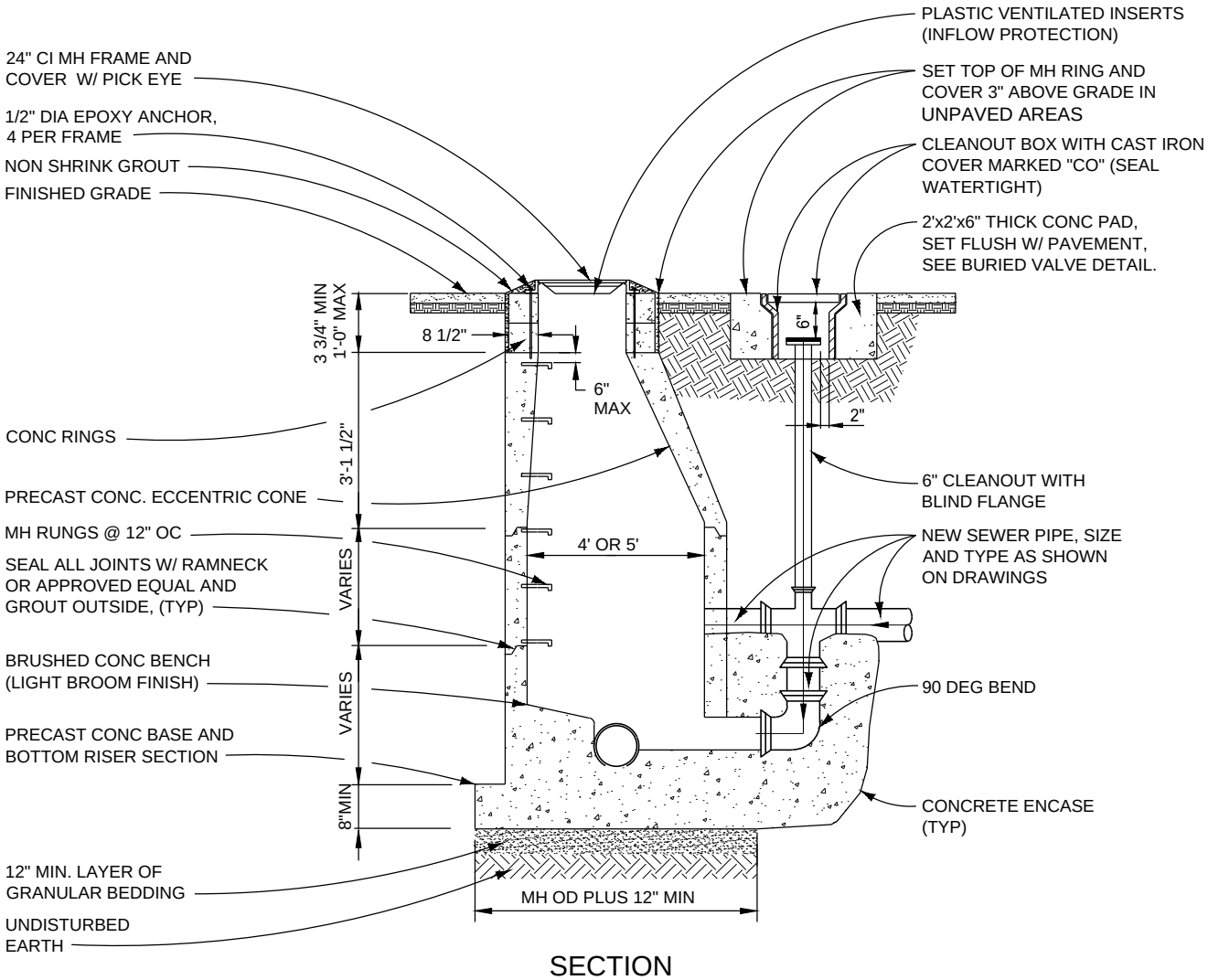

SECTION

NOTES:

1. ALL COMPONENTS SHALL BE CAPABLE OF HS-20 LOADING.
2. INSTALL ALL PIPES INTO MANHOLES WITH FLEXIBLE PIPE-TO-MANHOLE CONNECTORS.
3. DROP MH SHALL BE USED FOR ALL SITUATIONS WHERE INVERT OF PIPES ENTER MH AT 24" OR HIGHER ABOVE THE INVERT OUT ELEVATION.
4. MIN OF 18" CONC REQUIRED BENEATH 90° BEND.

TOWN OF ELIZABETH	
DROP MANHOLE	
SCALE: NTS	DATE: APRIL 2025
LAST REVISED: FEBRUARY 2017	S3
WATER AND SEWER STANDARDS	

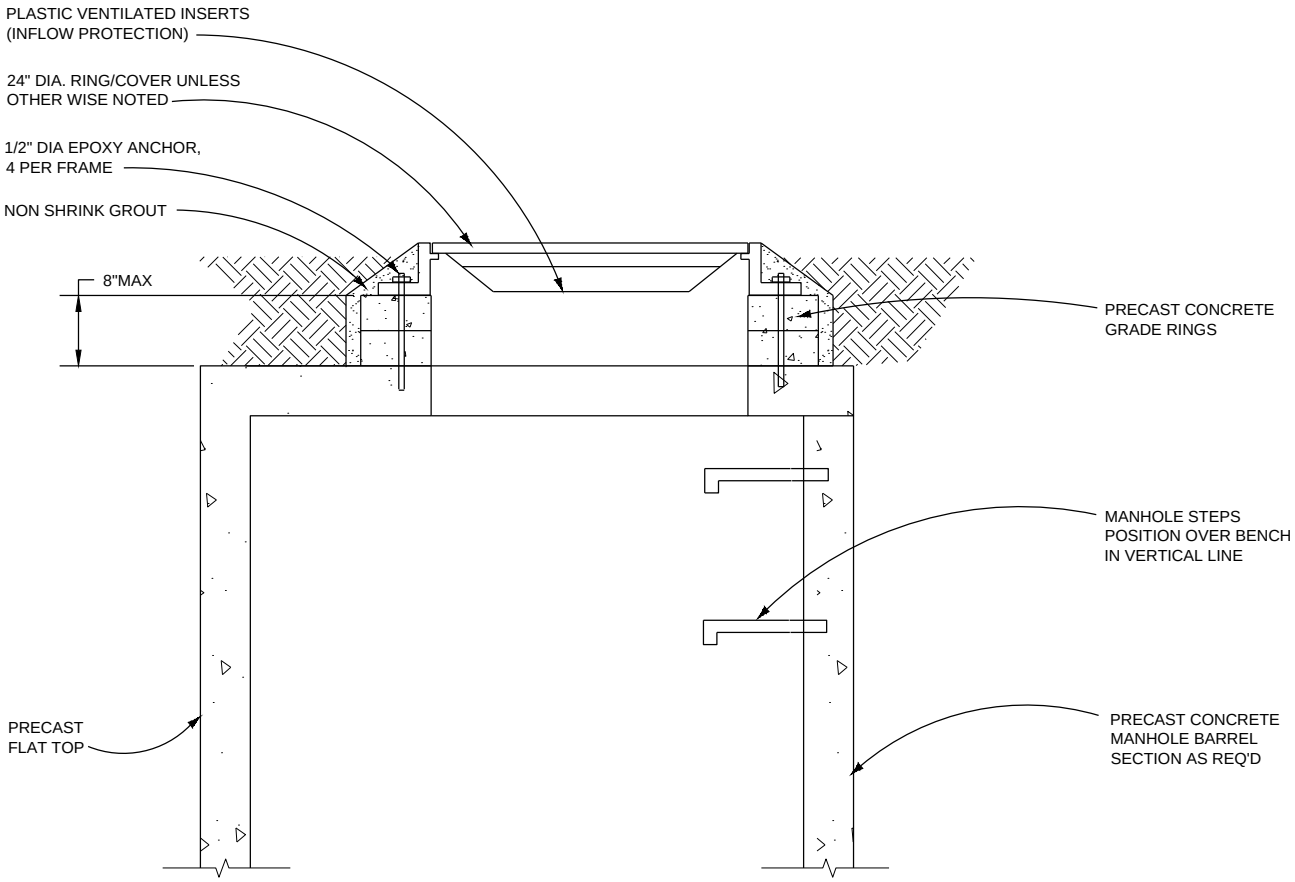

NOTES:
1. PRECAST SECTIONS TO CONFORM TO ASTM-C-478.
2. RING/COVER AND GRADE RINGS TO BE SET ON FULL BED OF MORTAR.

TOWN OF ELIZABETH

FLAT TOP MANHOLES

SCALE: NTS	DATE: APRIL 2025
LAST REVISED: FEBRUARY 2017	S4
WATER AND SEWER STANDARDS	

2/13/17 18:03 ARC56862 R19 P:\0 - MASTER DETAILS\OTHER FIRMS DETAILS\ELIZABETH STANDARD DETAILS - 2-9-17\DETAILS\S4-MANUAL FLAT TOP SHALLOW MANHOLE.DWG IMAGES: P:\0 - MASTER DETAILS\OTHER FIRMS DETAILS\ELIZABETH STANDARD DETAILS\DETAILS\ELIZABETH.JPG;

2/13/17 18:03 ARC56862 R19 P:\0 - MASTER DETAILS\OTHER FIRMS DETAILS\ELIZABETH STANDARD DETAILS - 2-9-17\DETAILS\S5-CAST IN PLACE BASE.DWG IMAGES: P:\0 - MASTER DETAILS\OTHER FIRMS DETAILS\ELIZABETH STANDARD DETAILS\DETAILS\ELIZABETH.JPG;

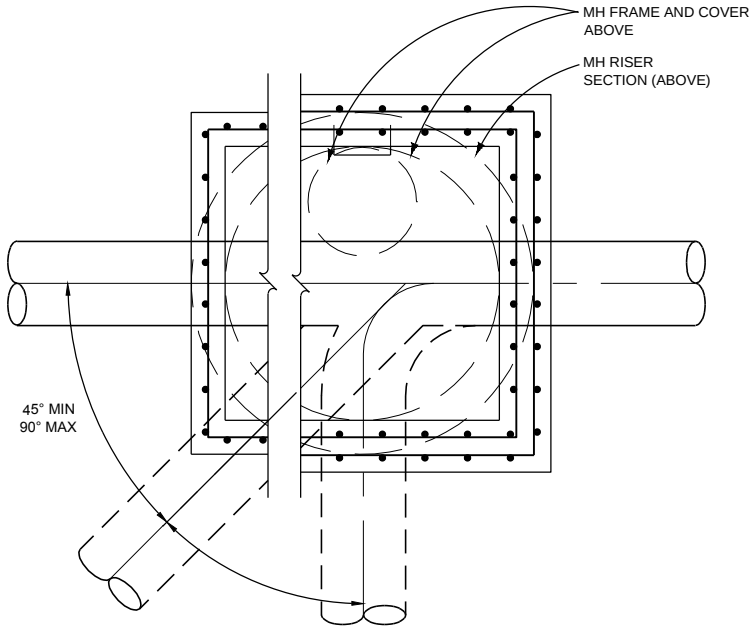

PLAN

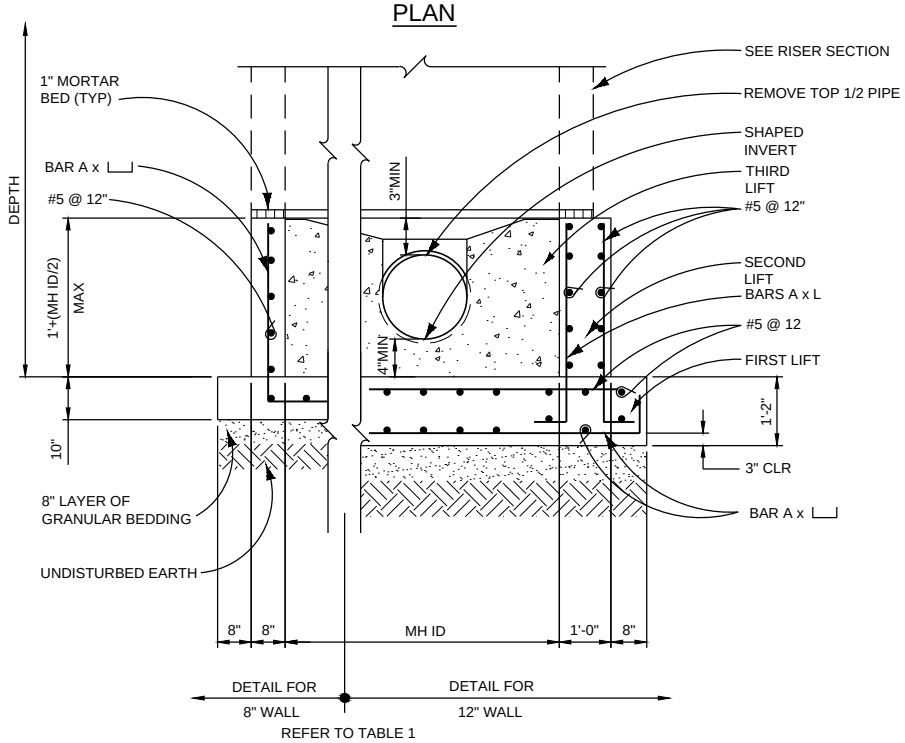

SECTION

TABLE 1			
MANHOLE RISER SECTION DIA	DEPTH BELOW FINISHED GRADE	REQD WALL	BARS A
4' ID	0 TO 8'	8"	#5 @ 12"
	8' TO 10'	8"	#5 @ 6"
	10' TO 20'	12"	#6 @ 12"
5' ID	0 TO 6'	8"	#5 @ 12"
	6' TO 10'	8"	#5 @ 6"
	10' TO 15'	12"	#6 @ 12"
	15' TO 20'	12"	#6 @ 6"
6' ID	0 TO 6'	8"	#5 @ 12"
	6' TO 9'	8"	#5 @ 6"
	9' TO 14'	12"	#6 @ 12"
	14' TO 20'	12"	#6 @ 6"
7' ID	0 TO 6'	8"	#5 @ 12"
	6' TO 9'	8"	#5 @ 6"
	9' TO 12'	12"	#6 @ 12"
	12' TO 20'	12"	#6 @ 6"

* MINIMUM CONCRETE COVER OVER BARS SHALL BE 2" UNLESS NOTED OTHERWISE

TOWN OF ELIZABETH

CAST-IN-PLACE MANHOLE BASE

SCALE: NTS

DATE: APRIL 2025

LAST REVISED: FEBRUARY 2017

WATER AND SEWER STANDARDS

S5

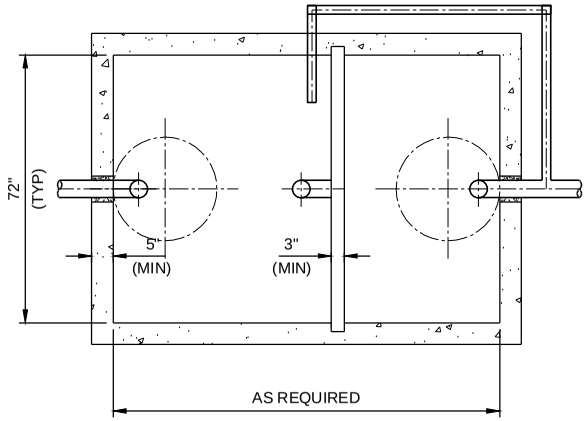

PLAN

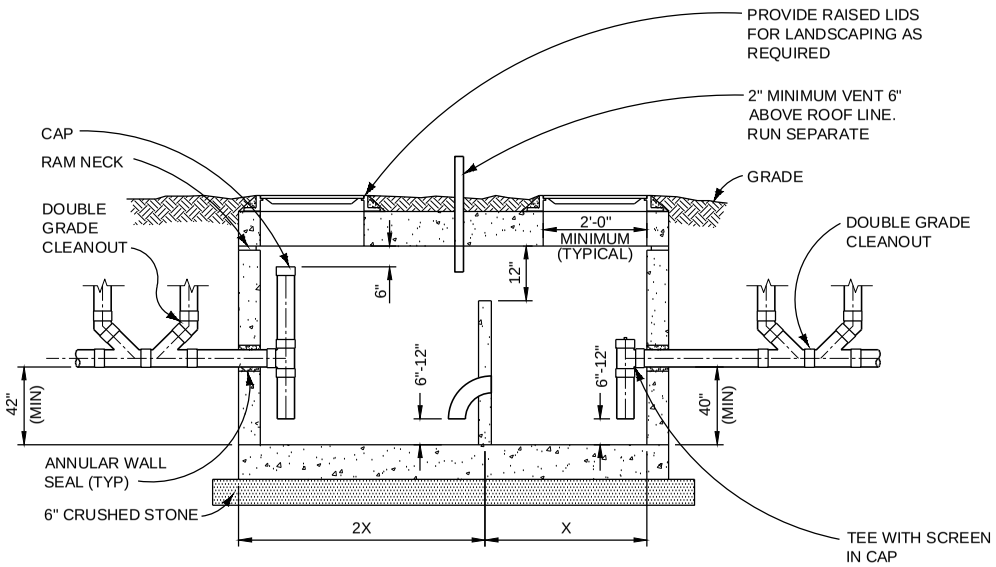

SECTION

NOTES:

1. SIZE GREASE INTERCEPTOR PER TOWN WATER AND SEWER STANDARDS.
2. EXTERIOR PIPE AND FITTINGS SHALL BE SDR-35 PVC, 4" DIAMETER MINIMUM.
3. MANHOLE RING AND COVER SHALL BE HS-20 TRAFFIC RATED.
4. FIBERGLASS TANKS ARE ACCEPTABLE AS ALTERNATE TO CONCRETE. FLOATATION CALCULATIONS WILL BE REQUIRED.
5. BACKFILL IN ACCORDANCE WITH MANUFACTURER'S RECOMMENDATIONS.
6. FINAL STRUCTURAL/REINFORCING AND RESISTANCE TO FLOATATION DESIGN OF PRECAST STRUCTURE TO BE COMPLETED BY MANUFACTURER OR PROFESSIONAL ENGINEER LICENSED IN THE STATE OF COLORADO.
7. INTERIOR PIPING SHALL BE GLUED SCHEDULE 40 PVC, 4" DIAMETER MINIMUM.
8. MINIMUM INTERCEPTOR SIZE SHALL BE 750 GALLONS.

EXTERIOR GREASE INTERCEPTOR

NTS

TOWN OF ELIZABETH

EXTERIOR GREASE INTERCEPTOR

SCALE: NTS

DATE: APRIL 2025

LAST REVISED: FEBRUARY 2017

WATER AND SEWER STANDARDS

S6

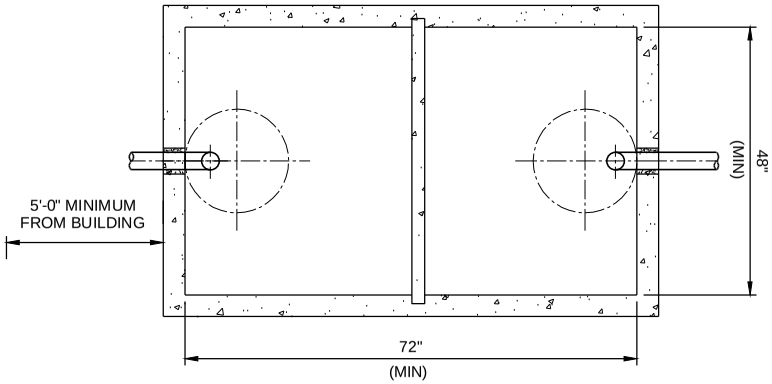

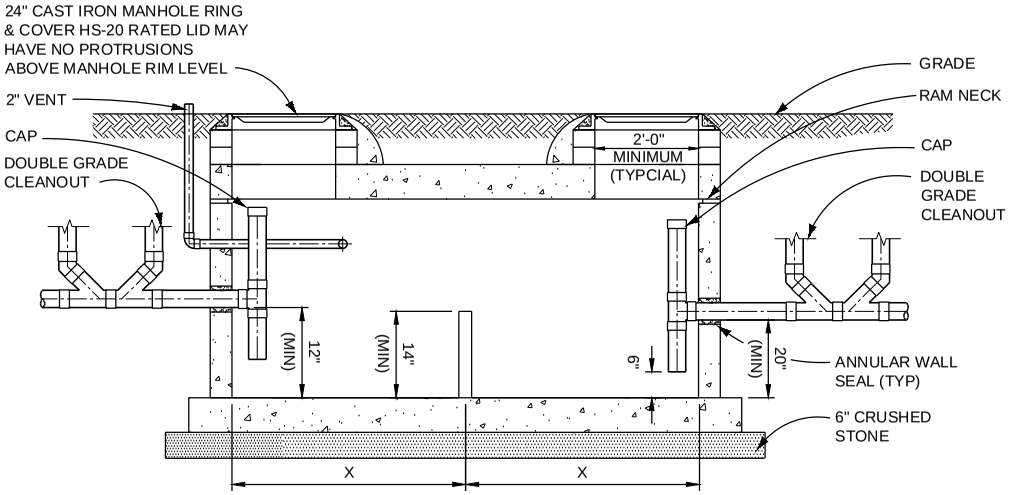

NOTES:

1. TOP OF VAULT BELOW FINISHED GRADE OR AT GRADE. IF BELOW GRADE, RING AND COVER SHALL BE ADJUSTED TO FINAL GRADE USING A MINIMUM OF 4" GRADE RING(S) AND A MAXIMUM OF 12" GRADE RING(S). FOR DEPTHS OVER 12", A MAN HOLE BARREL SECTION WILL BE REQUIRED. WITH A FLAT TOP FOR DEPTHS OF 4" OR LESS AND A ECCENTRIC CONE TOP FOR DEPTHS GREATER THAN 4'.
2. FIBERGLASS TANKS ARE ACCEPTABLE AS AN ALTERNATIVE TO CONCRETE. FLOATATION CALCULATIONS WILL BE REQUIRED.
3. BACKFILL IN ACCORDANCE WITH MANUFACTURER'S RECOMMENDATIONS; NO BACKFILL MATERIAL SHALL BE 3" OR GREATER IN DIAMETER.
4. FINAL STRUCTURAL/REINFORCING AND RESISTANCE TO FLOATATION DESIGN OF PRECAST STRUCTURE TO BE COMPLETED BY MANUFACTURER OR PROFESSIONAL ENGINEER LICENSED IN THE STATE OF COLORADO.
5. INTERIOR PIPING SHALL BE GLUED SCHEDULE 40 PVC, 4" DIAMETER MINIMUM.
6. EXTERIOR PIPING SHALL BE SDR-35, 4" DIAMETER MINIMUM.
7. MINIMUM INTERCEPTOR SIZE SHALL BE 500 GALLONS.

SAND AND OIL INTERCEPTOR

NTS

TOWN OF ELIZABETH

SAND AND OIL
INTERCEPTOR

SCALE: NTS

DATE: APRIL 2025

LAST REVISED: FEBRUARY 2017

S7

WATER AND SEWER STANDARDS

STANDARD DETAILS – WATER SYSTEM

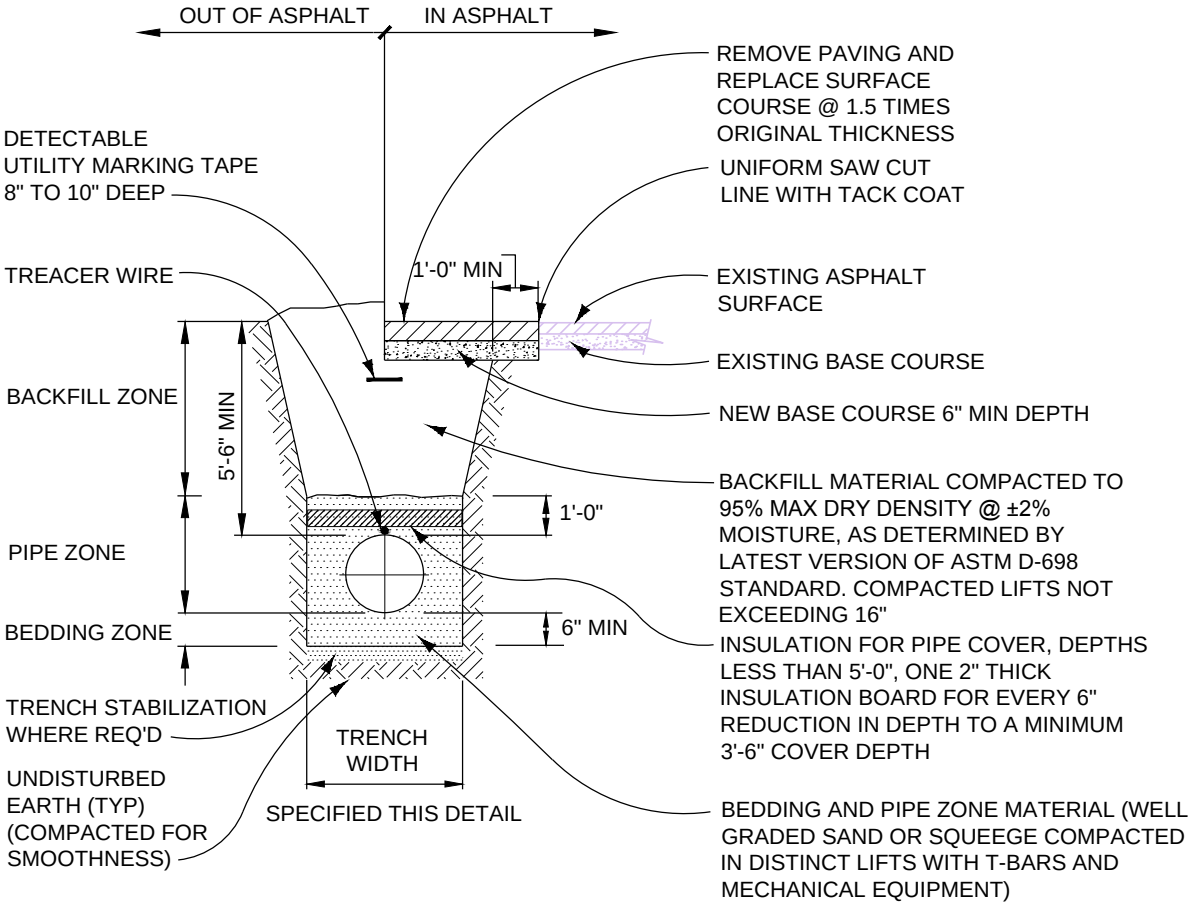

NOTE:
1. TRENCH SHALL CONFORM TO OSHA STANDARDS.

TRENCH WIDTH SHALL CONFORM TO THE FOLLOWING:

PIPE I.D.	MIN. WIDTH	MAX. WIDTH
4" OR SMALLER	1'-4"	2'-4"
6"	1'-6"	2'-6"
8"	1'-8"	2'-8"
12"	2'-0"	3'-0"
16"	2'-4"	3'-4"

TOWN OF ELIZABETH

WATER PIPE TRENCH

SCALE: NTS | DATE: APRIL 2025

LAST REVISED: FEBRUARY 2017

WATER AND SEWER STANDARDS

W1

2/13/17 16:44 ARC56862 R19 P:\0 - MASTER DETAILS\OTHER FIRMS DETAILS\ELIZABETH STANDARD DETAILS - 2-9-17\DETAILS\W1-PIPE TRENCH.DWG IMAGES: P:\0 - MASTER DETAILS\OTHER FIRMS DETAILS\ELIZABETH STANDARD DETAILS\DETAILS\ELIZABETH.JPG;

GENERAL:

1. ALL BURIED PIPING FITTINGS SHALL BE PROVIDED WITH CONCRETE THRUST BLOCKS AT ALL DIRECTION CHANGES UNLESS OTHERWISE NOTED.
2. IN ADDITION TO THRUST BLOCKS, ALL FITTINGS AND VALVES SHALL BE RESTRAINED FOR AT LEAST 40 FEET IN ALL DIRECTIONS. MEGALUGS MAY BE USED ON DIP AND PVC PIPE FOR RESTRAINT EXCEPT IN LOCATIONS WHERE FLEXIBLE JOINTS ARE REQUIRED.
3. CONCRETE THRUST BLOCKING TO BE POURED AGAINST UNDISTURBED EARTH OR STRUCTURAL BACKFILL.
4. KEEP CONCRETE CLEAR OF JOINT, BOLTS, NUTS, CLAMPS, AND OTHER ACCESSORIES.
5. THRUST BLOCKS SHALL NOT BE LOCATED OR SIZED TO ENCASE ADJACENT PIPES OR FITTINGS.
6. A BOND BREAKER SHALL BE PLACED BETWEEN THE PIPE AND THRUST BLOCK.
7. DO NOT COVER ANY BOLT CONNECTIONS.

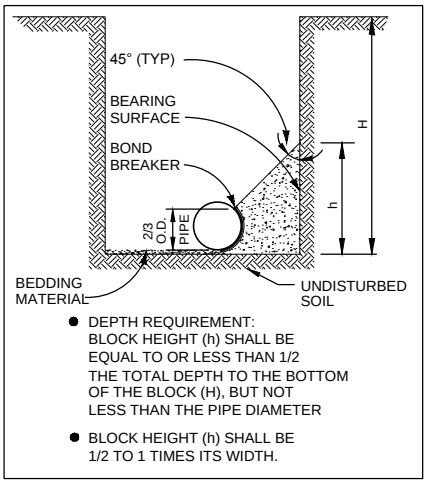

TYPICAL CROSS SECTION

FITTING SIZE (IN)	A_1 TEE, WYE PLUG OR CAP (SF)	A_2 90° BEND (SF)	45° BEND (SF)	22 1/2° BEND (SF)	11 1/4° BEND (SF)
4	1.4	2.0	1.1	1.0	1.0
6	3.2	4.5	2.4	1.2	1.0
8	5.7	8.0	4.3	2.2	1.1
10	8.8	12.5	6.8	3.4	1.7
12	12.7	18.0	9.7	5.0	2.5
14	17.3	24.5	13.3	6.8	3.4
16	22.6	32.0	17.3	8.8	4.4
18	28.6	40.5	21.9	11.2	5.6
20	35.3	50.0	27.1	13.8	6.9
24	50.9	72.0	39.0	19.9	10.0

TABLE 1 - BEARING AREA OF THRUST BLOCKS IN SQUARE FEET (HORIZONTAL BENDS & VERTICAL UPWARD BENDS)

HORIZONTAL BENDS AND VERTICAL UPWARD BENDS:

1. BEARING AREAS (TABLE 1) BASED ON TEST PRESSURE OF 150 psi, AN ALLOWABLE SOIL BEARING PRESSURE OF 2,000 psf AND A SAFETY FACTOR OF 1.5, TO COMPUTE BEARING AREAS FOR DIFFERENT TEST PRESSURES AND SOIL BEARING PRESSURES, USE THE FOLLOWING EQUATION:

BEARING AREA = (TEST PRESSURE / 150 psi) x (2,000 / SOIL BEARING PRESSURE psf) x (TABLE 1 VALUE)

2. UNLESS OTHERWISE NOTED ON THE GENERAL DRAWINGS IN THE GENERAL NOTES OR SPECIFICATIONS, USE SOIL BEARING PRESSURE = 2000 psf FOR THIS PROJECT.
3. BEARING AREA OF THRUST BLOCK SHALL NOT BE LESS THAN 1.0 SQUARE FOOT.
4. IF THE DEPTH REQUIREMENT (SEE TYPICAL CROSS SECTION) CAN NOT BE ACHIEVED, THE ENGINEER SHALL BE NOTIFIED.

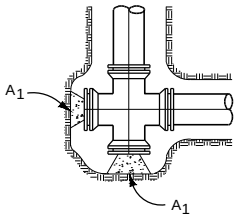

PLUGGED CROSS

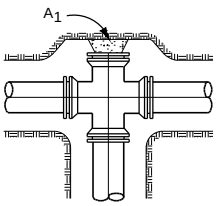

PLUGGED CROSS

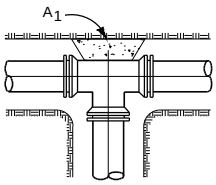

TEE

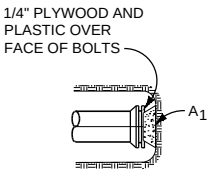

PLUG OR CAP

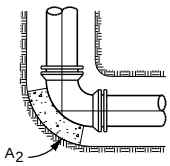

BEND

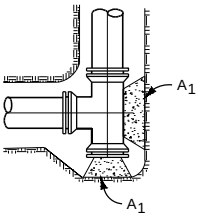

TEE PLUGGED ON RUN

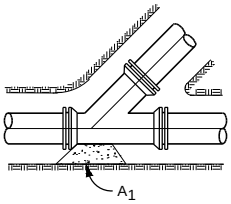

WYE

TOWN OF ELIZABETH

HORIZONTAL THRUST BLOCKS

SCALE: NTS | DATE: APRIL 2025

LAST REVISED: FEBRUARY 2017

WATER AND SEWER STANDARDS

W2

2/14/17 12:12 ARC56862 R19 P:\0 - MASTER DETAILS\OTHER FIRMS DETAILS\ELIZABETH STANDARD DETAILS - 2-9-17\DETAILS\W2-THRUST BLOCK.DWG IMAGES: P:\0 - MASTER DETAILS\OTHER FIRMS DETAILS\ELIZABETH STANDARD DETAILS\DETAILS\ELIZABETH.JPG;

2/14/17 12:10 ARC56862 R19 P:\0 - MASTER DETAILS\OTHER FIRMS DETAILS\ELIZABETH STANDARD DETAILS - 2-9-17\DETAILS\W3-THRUST BLOCK.DWG IMAGES: P:\0 - MASTER DETAILS\OTHER FIRMS DETAILS\ELIZABETH STANDARD DETAILS\DETAILS\ELIZABETH.JPG;

TABLE 2 - VOLUME OF THRUST BLOCK IN CUBIC YARDS (VERTICAL DOWNWARD BENDS)

FITTING SIZE (IN)	V_1			ROD SIZE	EMBEDMENT (FT)
	45° BEND (CY)	22 1/2° BEND (CY)	11 1/4° BEND (CY)		
4	0.5	0.3	0.1	#6	2.5
6	1.1	0.6	0.3	#6	2.5
8	2.0	1.1	0.5	#6	2.5
10	3.1	1.7	0.9	#6	2.5
12	4.4	2.4	1.2	#6	2.5
14	6.1	3.3	1.7	#8	3.0
16	7.9	4.3	2.2	#8	3.0
18	10.0	5.4	2.8	#8	3.0
20	12.3	6.7	3.4	#8	3.0
24	17.8	9.6	4.9	#8	3.0

VERTICAL DOWNWARD BENDS:

1. VERTICAL BENDS THAT REQUIRE A THRUST BLOCK VOLUME EXCEEDING 5 CUBIC YARDS REQUIRE SPECIAL BLOCKING DETAILS. SEE DRAWINGS FOR VOLUMES SHOWN TO LEFT OF HEAVY, BOLD LINE IN TABLE 2.
2. THRUST BLOCK VOLUMES (TABLE 2) FOR VERTICAL DOWNWARD BENDS HAVING UPWARD RESULTANT THRUSTS ARE BASED ON TEST PRESSURE OF 150 PSI, THE WEIGHT OF CONCRETE = 4050 LBS/CUBIC YARD, AND A SAFETY FACTOR OF 1.5. TO COMPUTE VOLUMES FOR DIFFERENT TEST PRESSURES AND CONCRETE WEIGHTS, USE THE FOLLOWING EQUATION:

VOLUME = (TEST PRESSURE / 150) x (4,050 / CONCRETE WEIGHT) x (TABLE 2 VALUE)

3. VOLUME OF THRUST BLOCK IN CUBIC YARDS FOR VALVES SHALL BE THE SAME VOLUME USED FOR 11 1/4 BENDS.

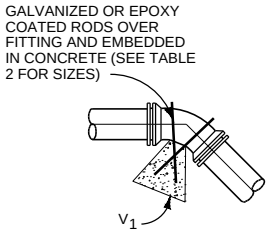

VERTICAL DOWNWARD BEND

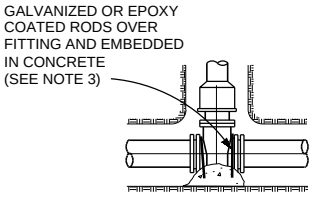

VALVE

THRUST RESTRAINTS

NTS

TOWN OF ELIZABETH

VERTICAL THRUST BLOCKS

SCALE: NTS	DATE: APRIL 2025
LAST REVISED: FEBRUARY 2017	W3
WATER AND SEWER STANDARDS	

2/14/17 12:08 ARC56862 R19 P:\0 - MASTER DETAILS\OTHER FIRMS DETAILS\ELIZABETH STANDARD DETAILS - 2-9-17\DETAILS\W4-THRUST RESTRAINT.DWG IMAGES: P:\0 - MASTER DETAILS\OTHER FIRMS DETAILS\ELIZABETH STANDARD DETAILS\DETAILS\ELIZABETH..JPG;

LENGTH OF RESTRAINED PIPE

PIPE SIZE	FITTING	90° BEND, TEE, PLUG, OR VALVE	45° BEND	22 1/2° BEND	11 1/4° BEND
4"	L	30'	9'	1'	-
6"	L	45'	13'	4'	-
8"	L	60'	18'	5'	1'
12"	L	90'	25'	7'	2'
14"	L	100'	28'	7'	2'
16"	L	110'	32'	8'	2'
20"	L	130'	39'	10'	3'
24"	L	160'	45'	12'	3'

NOTES:
1. LENGTH OF RESTRAINED PIPE MEASURED EACH WAY FROM VALVES AND BENDS.
2. BASED ON 100 PSI INTERNAL PRESSURE.
3. LENGTH REFERS TO THE AMOUNT OF PIPE WHICH MUST BE TIED TOGETHER.
4. FOR LENGTH OF RESTRAINED PIPE AT DIFFERENT TEST PRESSURES, USE THE FOLLOWING EQUATION:
5. IF A VALVE IS WITHIN DISTANCE "L" OF A FITTING. THE VALVE MUST BE TIED TO THAT FITTING.
6. CROSSES MUST BE RESTRAINED IN ALL APPLICABLE DIRECTIONS.
7. LENGTH OF RESTRAINED PIPE CHART IS ALSO FOR THE LENGTH OF JOINT RESTRAINT FOR MEGALUGS, OR OTHER RESTRAINT SYSTEM.

LENGTH OF RESTRAINED PIPE = (TEST PRESSURE/100 PSI) x (TABLE VALUE)

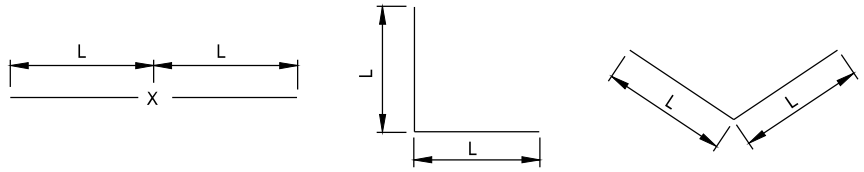

TEE OR VALVE — 90° BEND — BENDS

STANDARD THRUST BLOCKS

TOWN OF ELIZABETH

MECHANICAL
THRUST RESTRAINT

SCALE: NTS | DATE: APRIL 2025

LAST REVISED: FEBRUARY 2017

WATER AND SEWER STANDARDS

W4

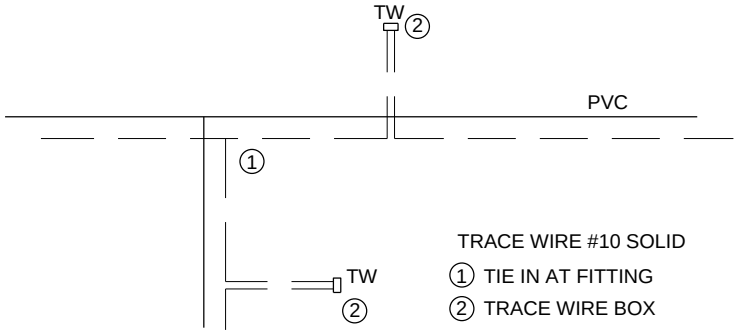

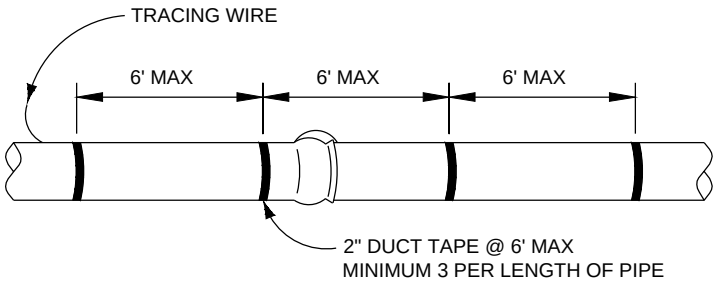

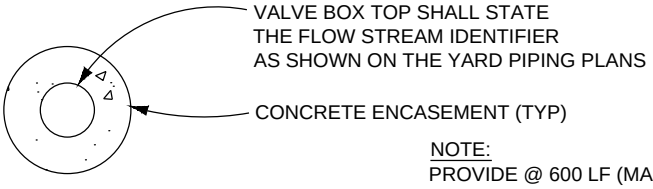

NOTE:
PROVIDE @ 600 LF (MAX) SPACING AND AT ALL VALVES.

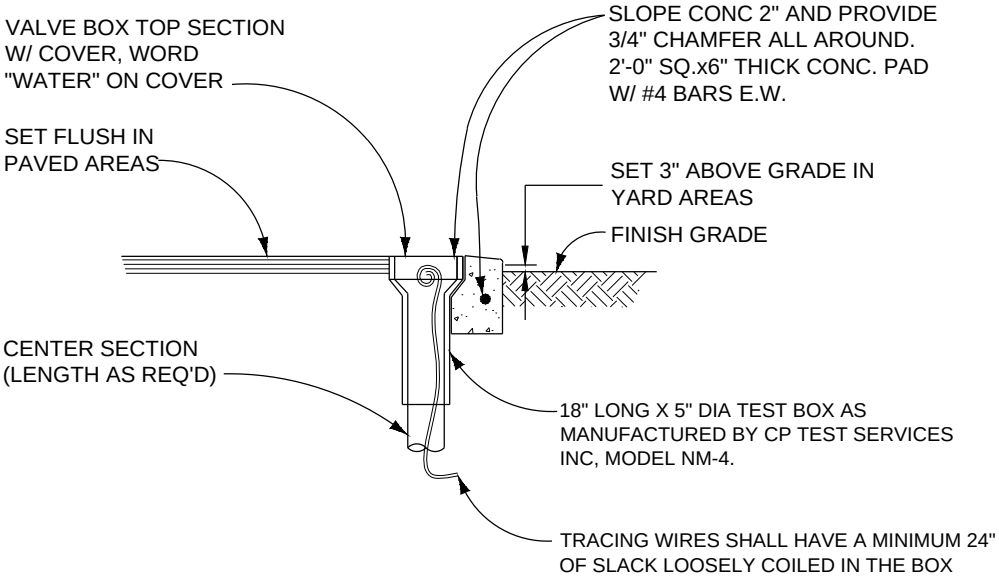

VALVE BOX PAD

TOWN OF ELIZABETH	
TRACER WIRE	
SCALE: NTS	DATE: APRIL 2025
LAST REVISED: FEBRUARY 2017	W5
WATER AND SEWER STANDARDS	

2/14/17 12:08 ARC56862 R19 P:\0 - MASTER DETAILS\OTHER FIRMS DETAILS\ELIZABETH STANDARD DETAILS - 2-9-17\DETAILS\W5-TRACER WIRE.DWG IMAGES: P:\0 - MASTER DETAILS\OTHER FIRMS DETAILS\ELIZABETH STANDARD DETAILS\DETAILS\ELIZABETH.JPG;

2/14/17 12:07 ARC56862 R19 P:\0 - MASTER DETAILS\OTHER FIRMS DETAILS\ELIZABETH STANDARD DETAILS - 2-9-17\DETAILS\W6-BURIED VALVE.DWG IMAGES: P:\0 - MASTER DETAILS\OTHER FIRMS DETAILS\ELIZABETH STANDARD DETAILS\DETAILS\ELIZABETH.JPG;

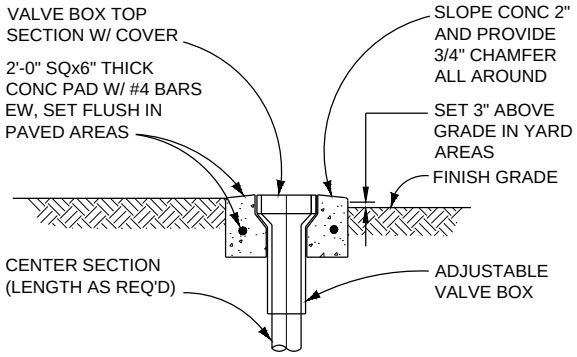

VALVE BOX PAD

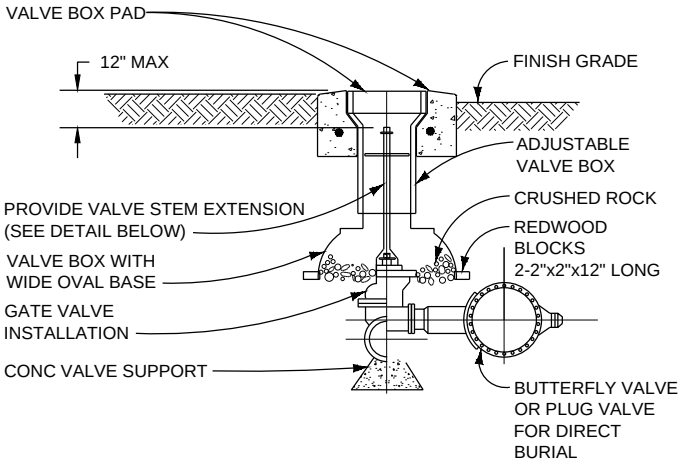

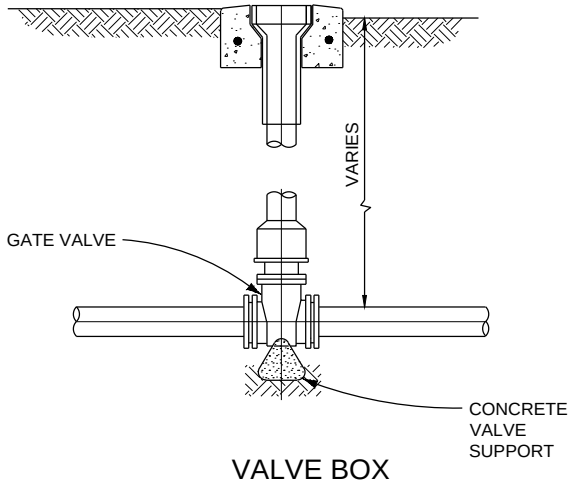

VALVE BOX

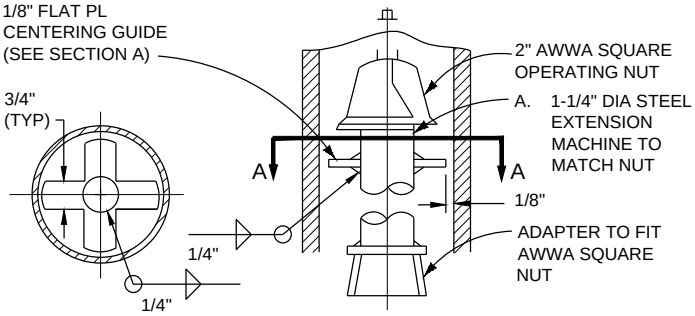

SECTION A

NOTE:
1. PROVIDE PROTECTIVE COATING TO EXTERIOR SURFACES OF VALVE BODY, VALVE BOX, EXTENSION STEM AND APPURTENANCES.

BURIED VALVE INSTALLATION

TOWN OF ELIZABETH	
BURIED VALVES	
SCALE: NTS	DATE: APRIL 2025
LAST REVISED: FEBRUARY 2017	W6
WATER AND SEWER STANDARDS	

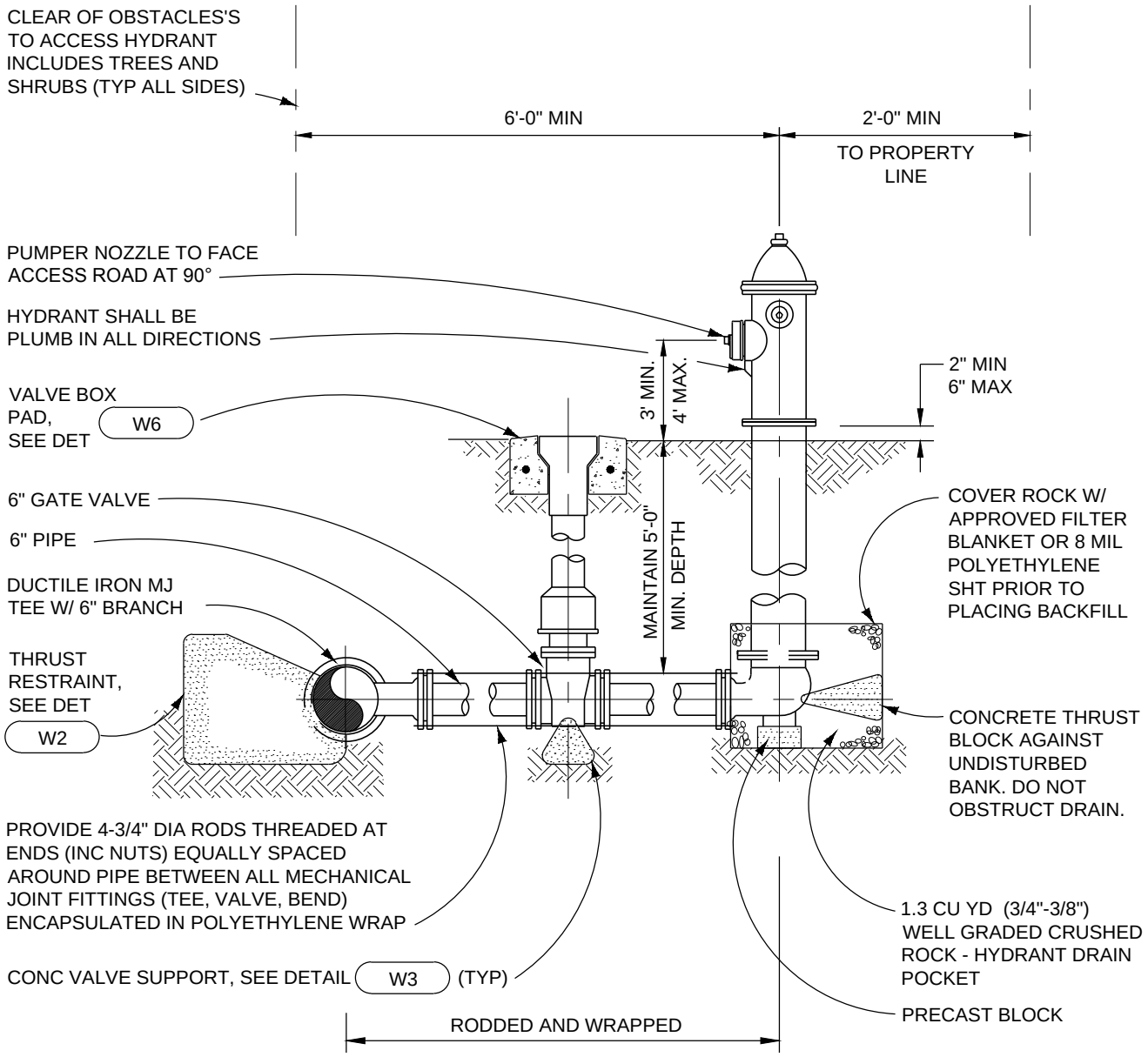

FIRE HYDRANT

NTS

TOWN OF ELIZABETH	
FIRE HYDRANT	
SCALE: NTS	DATE: APRIL 2025
LAST REVISED: FEBRUARY 2017	W7
WATER AND SEWER STANDARDS	

2/14/17 12:07 ARC56862 R19 P:\0 - MASTER DETAILS\OTHER FIRMS DETAILS\ELIZABETH STANDARD DETAILS - 2-9-17\DETAILS\W7-FIRE HYDRANT.DWG IMAGES: P:\0 - MASTER DETAILS\OTHER FIRMS DETAILS\ELIZABETH STANDARD DETAILS\DETAILS\ELIZABETH.JPG;

2/14/17 13:26 ARC56862 R19 P:\0 - MASTER DETAILS\OTHER FIRMS DETAILS\ELIZABETH STANDARD DETAILS - 2-9-17\DETAILS\W8-TEMPORARY BLOWOFF.DWG IMAGES: P:\0 - MASTER DETAILS\OTHER FIRMS DETAILS\ELIZABETH STANDARD DETAILS\DETAILS\ELIZABETH.JPG;

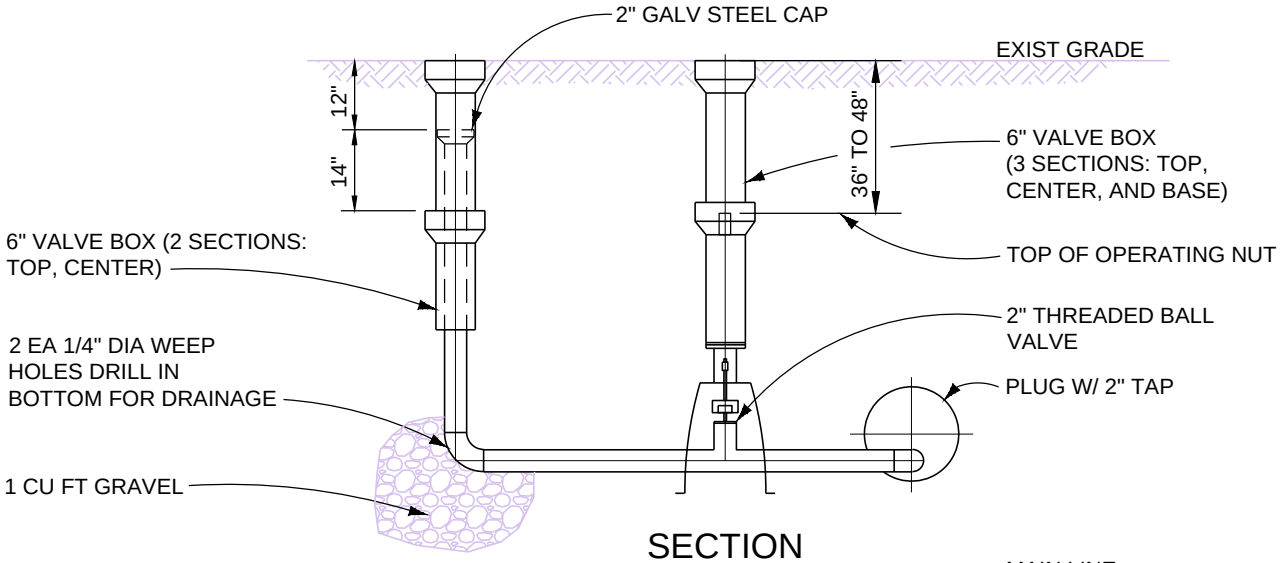

SECTION

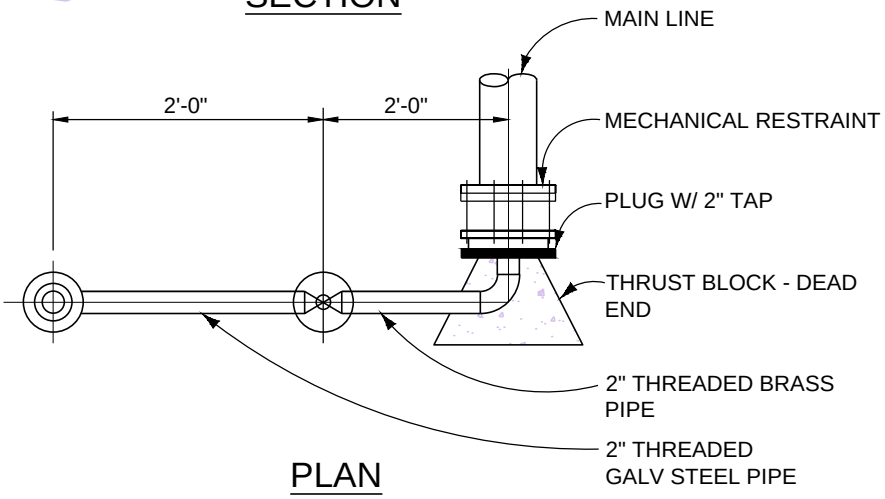

PLAN

BLOWOFF

NTS

TOWN OF ELIZABETH	
BLOW-OFF	
SCALE: NTS	DATE: APRIL 2025
LAST REVISED: FEBRUARY 2017	W8
WATER AND SEWER STANDARDS	

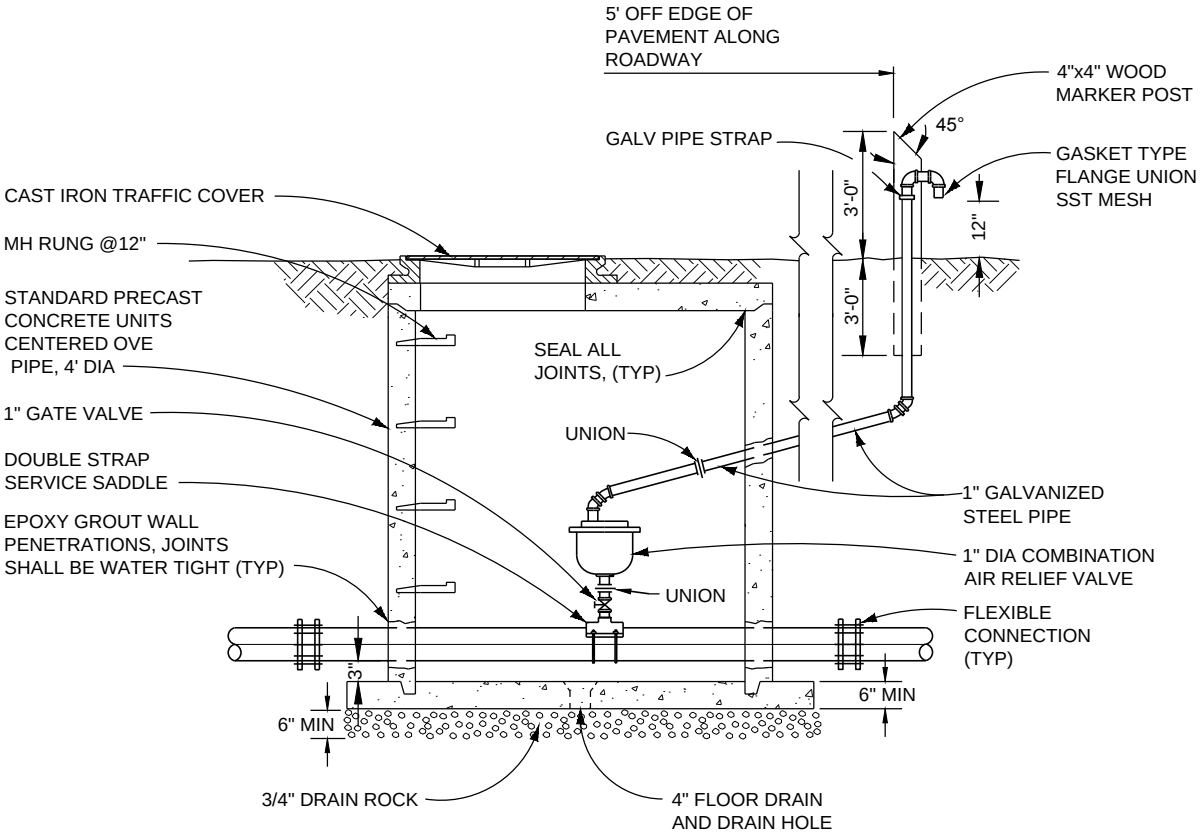

TOWN OF ELIZABETH

AIR REFIEF VALVE

SCALE: NTS	DATE: APRIL 2025
LAST REVISED: FEBRUARY 2017	W9
WATER AND SEWER STANDARDS	

2/14/17 13:26 ARC56862 R19 P:\0 - MASTER DETAILS\OTHER FIRMS DETAILS\ELIZABETH STANDARD DETAILS - 2-9-17\DETAILS\W9 - AIR RELIEF VALVE VAULT.DWG IMAGES: P:\0 - MASTER DETAILS\OTHER FIRMS DETAILS\ELIZABETH STANDARD DETAILS\DETAILS\ELIZABETH.JPG;

STANDARD DETAILS – SERVICE LINES

2/14/17 13:25 ARC56862 R19 P:\0 - MASTER DETAILS\OTHER FIRMS DETAILS\ELIZABETH STANDARD DETAILS - 2-9-17\DETAILS\L1-WATER SERVICE.DWG IMAGES: P:\0 - MASTER DETAILS\OTHER FIRMS DETAILS\ELIZABETH STANDARD DETAILS\DETAILS\ELIZABETH..JPG;

NOTES:

1. DOUBLE GRADE CLEANOUTS (SEE DWG L3).
2. WHERE A WYE IS INSTALLED WITHOUT A CONNECTION TO A CUSTOMER, AN APPROVED CAP, PLUG, OR STOPPER SHALL BE INSTALLED. THE END OF THE LATERAL WITH A 2"x4" REDWOOD STAKE, EXTENDING 12" ABOVE FINISHED GRADE.
3. ANY SERVICE THAT REQUIRES CROSSING ADJACENT PRIVATE PROPERTY WILL REQUIRE A DEDICATED EASEMENT AND MUST BE APPROVED BY THE TOWN.

APRIL 2025

TOWN OF ELIZABETH

TYPICAL RESIDENTIAL SEWER SERVICE

SCALE: NTS	DATE: APRIL 2025
LAST REVISED: FEBRUARY 2017	L1
WATER AND SEWER STANDARDS	

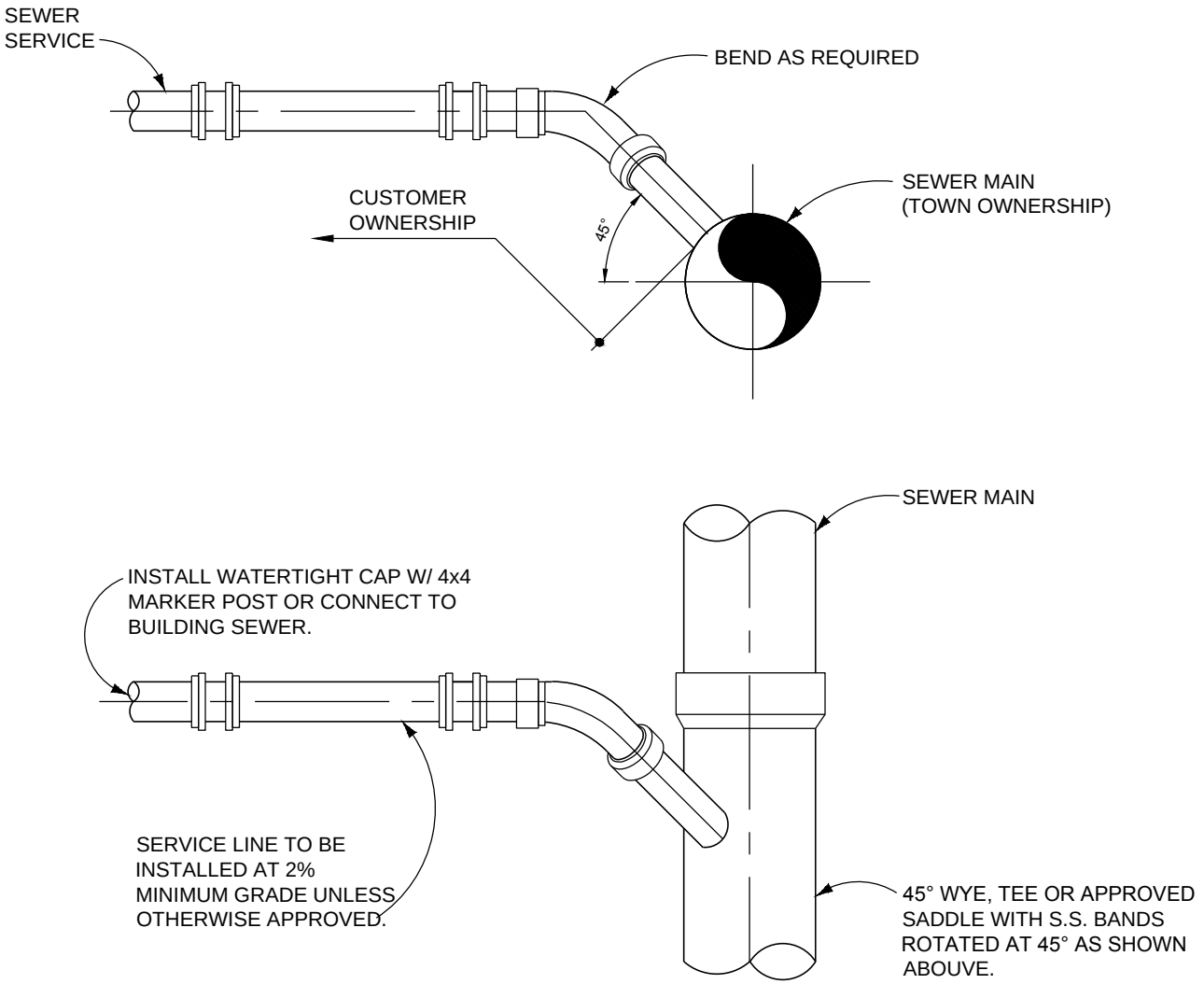

TOWN OF ELIZABETH

SEWER SERVICE
WYE CONNECTION

SCALE: NTS	DATE: APRIL 2025
LAST REVISED: FEBRUARY 2017	L2
WATER AND SEWER STANDARDS	

2/14/17 13:25 ARC56862 R19 P:\0 - MASTER DETAILS\OTHER FIRMS DETAILS\ELIZABETH STANDARD DETAILS - 2-9-17\DETAILS\L2-SEWER SERVICE CONNECTION DETAIL.DWG IMAGES: P:\0 - MASTER DETAILS\OTHER FIRMS DETAILS\ELIZABETH STANDARD DETAILS\DETAILS\ELIZABETH.JPG;

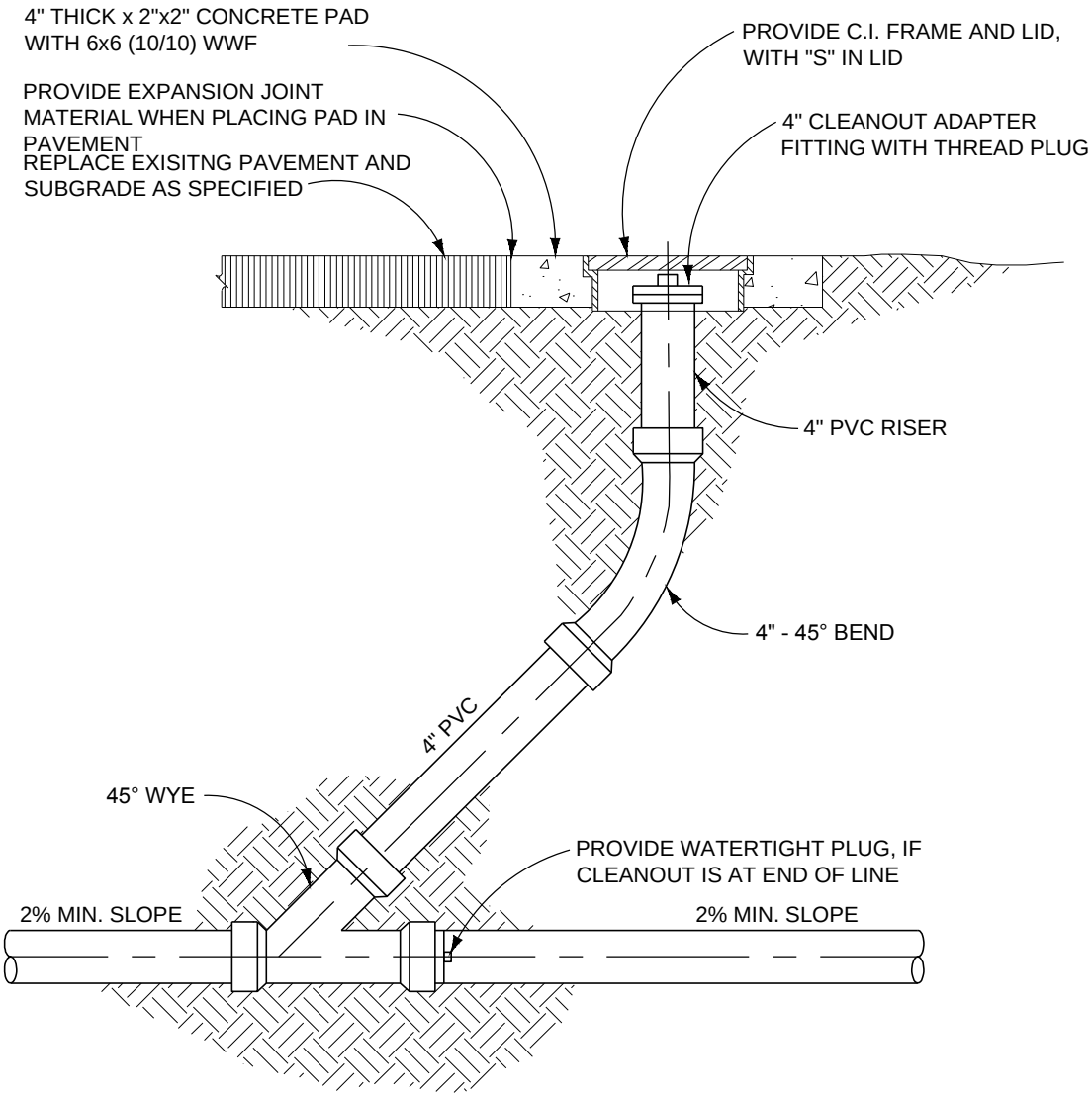

NOTE:

1. BEND & WYE TO BE GASKETED, NO GLUE JOINTS. PIPE MATERIAL AS SPECIFIED FOR SERVICE LINE.
2. FOR LOCATIONS IN PRIVATE LANDSCAPING AREA TERMINATE CLEANOUT 4" ABOVE GRADE. CAST IRON COVER NOT REQUIRED.

TOWN OF ELIZABETH	
SEWER SERVICE LINE CLEANOUT	
SCALE: NTS	DATE: APRIL 2025
LAST REVISED: FEBRUARY 2017	L3
WATER AND SEWER STANDARDS	

IMAGES: P:\0 - MASTER DETAILS\OTHER FIRMS DETAILS\ELIZABETH STANDARD DETAILS\DETAILS\ELIZABETH.JPG; P:\ELIZ\STANDARD DETAILS\DETAILS\CLEAN OUT.JPG; 2/14/17 13:24 ARC56862 R19 P:\0 - MASTER DETAILS\OTHER FIRMS DETAILS\ELIZABETH STANDARD DETAILS - 2-9-17\DETAILS\L3-SERVE LINE CLEANOUT DETAIL.DWG

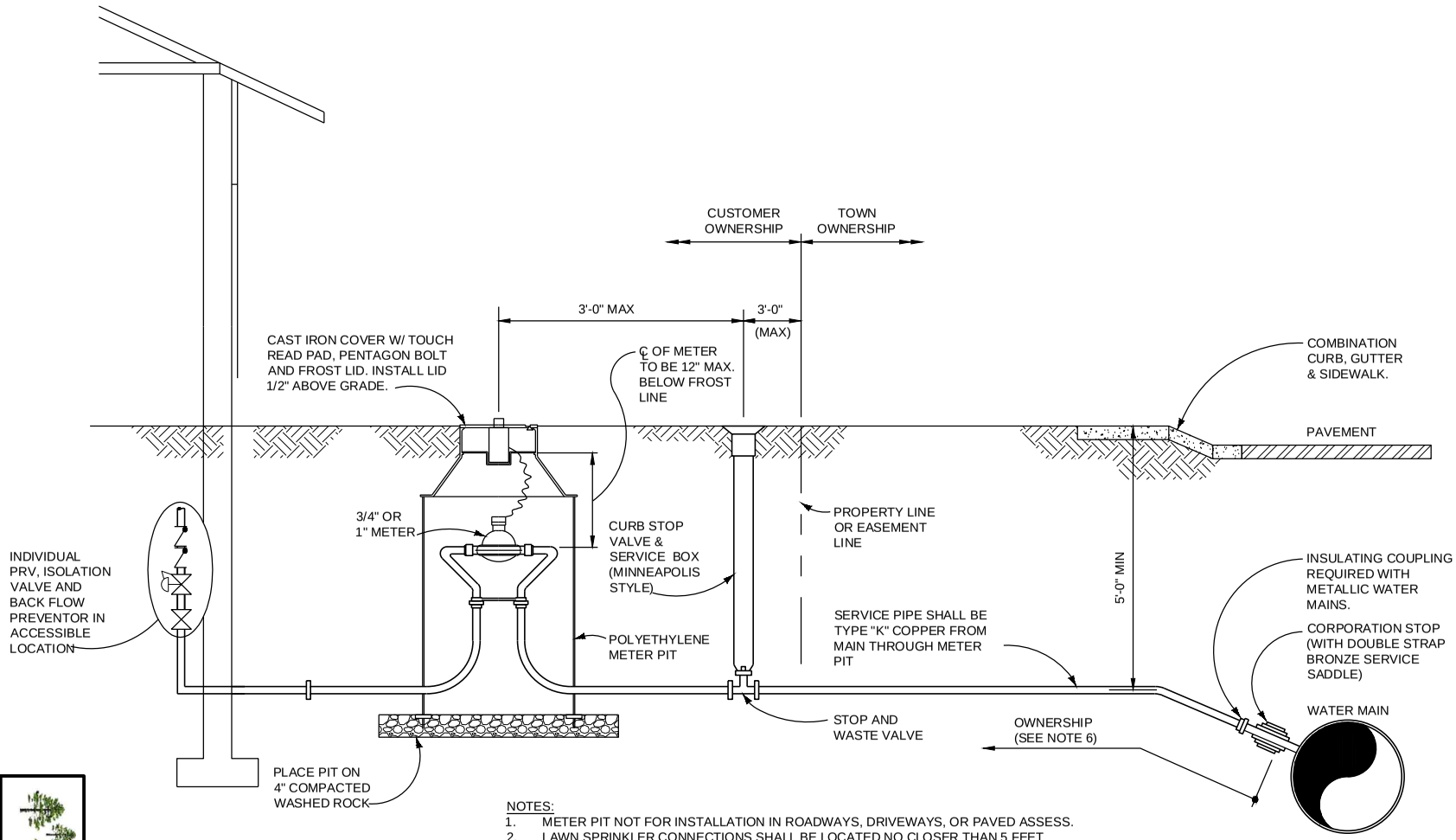

NOTES:

1. METER PIT NOT FOR INSTALLATION IN ROADWAYS, DRIVEWAYS, OR PAVED ASSESS.
2. LAWN SPRINKLER CONNECTIONS SHALL BE LOCATED NO CLOSER THAN 5 FEET DOWNSTREAM OF METER PIT.
3. NO CHANGES IN PIPE DIAMETER SHALL BE MADE IN THE METER PIT OR BEYOND THE METER PIT WALL ON THE OUTLET SIDE.
4. PIPELINE INSULATION REQUIRED FOR COVERS LESS THAN 4'-0" (SEE DETAIL W1).
5. METER MAY ALSO BE LOCATED IN THE BUILDING WITH OUTSIDE REMOVE READ IF APPROVED BY THE TOWN.
6. SEE WATER AND SEWER STANDARDS SECTION 4.2 FOR DESCRIPTION OF SERVICE LINE OWNERSHIP.

TOWN OF ELIZABETH

TYPICAL SINGLE FAMILY DETACHED RESIDENTIAL WATER SERVICE

SCALE: NTS

DATE: APRIL 2025

LAST REVISED: FEBRUARY 2017

WATER AND SEWER STANDARDS

L4

ORDINANCE 25-06

AN ORDINANCE AMENDING SECTION 13-6-60 OF THE TOWN OF ELIZABETH MUNICIPAL CODE AND ADOPTING THE TOWN OF ELIZABETH WATER AND SEWER STANDARDS DATED APRIL 2025

BE IT ORDAINED BY THE BOARD OF TRUSTEES FOR THE TOWN OF ELIZABETH, COLORADO, THAT:

Section 1. Section 13-6-60 of the Town of Elizabeth Municipal Code is hereby repealed and reenacted to read as follows:

Sec. 13-6-60 Adoption.

The Town, through its Board of Trustees, hereby adopts the *Town of Elizabeth Water and Sewer Standards*, dated April 2025. One (1) copy of said Standards shall be maintained on file at the office of the Town Clerk and may be inspected during regular business hours.

A copy of the *Town of Elizabeth Water and Sewer Standards*, dated April 2025 is attached hereto and identified as **Exhibit A**.

Section 2. Severability. If any section, paragraph, clause or provision of this Ordinance shall for any reason be held to be invalid or unenforceable, the invalidity or enforceability of such section, paragraph, clause or provision shall not affect any of the remaining provision of this Ordinance, the intent being that the same are severable.

Section 3. The Board of Trustees hereby finds, determines and declares that this Ordinance is promulgated under the general police power of the Town, that it is promulgated for the health, safety and welfare of the public, and that this Ordinance is necessary for the preservation of health and safety and for the protection of public convenience and welfare. The Board of Trustees further determines that the Ordinance bears a rational relation to the proper legislative objective sought to be attained.

Section 4. This Ordinance shall become effective thirty (30) days after publication.

Read and approved at the meeting of the Board of Trustees of the Town of Elizabeth, Colorado, this 13th day of April 2025.

Passed by a vote of ____ for and ____ against and ordered published.

_____
Angela Ternus, Mayor

ATTEST:

_____

Michelle Oeser, Town Clerk

From:	Patrick Davidson
To:	Angela Ternus; Tracy Hutchins; Loren Einspahr; Michael Schroder; Dave Conley; Steve Gaither
Cc:	Patrick Davidson
Subject:	Weekly Update 4-25-2025
Date:	Friday, April 25, 2025 9:28:09 AM
Attachments:	image001.png image002.png image003.png image004.png

---

Good morning, Mayor, Mayor Pro Tem, and Members of the Board of Trustees. Here is your weekly update:

Pine Ridge Metro District. You would have received a separate email regarding the public hearings for this project. We are monitoring this project to determine if the Town should be involved as an objecting party for either water or wastewater development in the district. It is our understanding that the water will be coming from the Wild Pointe Subdivision, and that sewage will be contained in an off-drainage system. If both conditions are correct, then there are no concerns for the Town.

Elizabash / Stampede Rodeo. As you may recall, street closures require an application, a map for the closure, and approval from several agencies such as PD, PW, and Elizabeth Fire. We have been working with the Chamber of Commerce to finalize all the necessary permits to no avail. Contact was made in February and forms were provided; a deadline of April 1st was set and lapsed; Mike DeVol tried to establish contact on April 23rd to no avail. These are necessary and required so that PD can determine location of Staffing, and so that PW can determine street closures, staffing, barricade locations, etc. We will continue to contact the Chamber for action, but I wanted the Board aware of these difficulties and that the timelines have passed. We can still get it done, but the window is closing.

Ward Discussion. You will receive a separate email regarding the upcoming Ward Discussion. Additional information will be provided in the Board packet in advance of the meeting on May 13th. This is to get the members of the Board up to date on the discussions that began in February 2024 on the ward system.

"Big Box" Store Analysis. Several members of the BOT have made inquiries as to the likelihood of a "big box" store, such as Home Depot, in the Elizabeth area. I am providing a separate email that makes a very surface level review of the practicalities of a large commercial retailer in Elizabeth or the greater Elizabeth area. As the Board will assuredly be discussing economic development during the May 3rd workshop, I wanted to get you this brief analysis out in advance.

Have a great weekend, and I will see you Wednesday.

Patrick

Patrick G. Davidson, Town Administrator
151 S. Banner Street
Elizabeth, CO 80107
(720) 351-4504
pdavidson@townofelizabeth.org

From:	Patrick Davidson
To:	Angela Ternus; Tracy Hutchins; Loren Einspahr; Michael Schroder; Dave Conley; Steve Gaither
Cc:	Patrick Davidson
Subject:	Weekly Update 5-2-2025
Date:	Friday, May 2, 2025 10:50:49 AM
Attachments:	image001.png image002.png image003.png image004.png

---

Good morning, Mayor, Mayor Pro Tem, and Members of the Board of Trustees. Here is your newest weekly update.

Board Workshop. The BOT will have a workshop tomorrow from 9:00-Noon to discuss the Board's March 8th retreat. Department Heads are planning in being in attendance as well as Alex and Hannah. Please let Michelle or I know if you want a printed copy of the final report Todd generated.

Town Clean-Up. Town clean-up day is Saturday, May 10th. The time will be from 8:00-Noon. PW staff generally assembles around 7:00 to get things lined out. If members of the Board have items, they wish to bring for clean-up day, please do so. We can either unload your vehicle prior to the start of the event, or after, depending on the time you are available.

Meat-In. The meat-in is scheduled for Saturday, May 17th. As you may recall, there are street closures that day around the Locker Plant, and PD will likely be assisting in pedestrians crossing from Main Street to the event. I would encourage Board members to park at Town Hall if you are interested in attending.

Main Street/The Depot. The pre-construction meeting for the Depot Parking Lot will be occurring on Tuesday, May 6th. I anticipate ESI will begin to mobilize that day to begin construction activities. Triple M will be working this weekend to catch up on delays that had occurred within their schedule.

Water and Sewer Standards. You may recall that Mike presented the proposed 2025 water and sewer standards during the April 22nd BOT meeting. They will be presented again on May 13th for Board action. Should you have any questions, please let Mike or I know in advance of the meeting so that we can share any questions or responses in advance.

Fuel Island Agreement. I believe we are ready to act on the fuel agreement that has been discussed now for some time. The agreement has been executed by the Fire Chief and the School Superintendent, but the BOT will need to authorize my signature for the document. The contract was prepared by Corey, with input from the balance of the organizations, and is ready to go. It will be provided by a separate email in advance of the meeting and in advance

of the Board packet.

Wards Discussion. The topic of wards is also on the May 13th workshop. It will begin at 6:00PM. The Board will have an opportunity to discuss this matter, and to provide guidance as to how to proceed. Corey will not be in attendance that evening, however, if direction is provided during the 13th, Corey will have the appropriate documents in place for action on May 27th.

Have a great weekend, and I will see you tomorrow.

Patrick

Patrick G. Davidson, Town Administrator
151 S. Banner Street
Elizabeth, CO 80107
(720) 351-4504
pdavidson@townofelizabeth.org

From:	Patrick Davidson
To:	Angela Ternus; Tracy Hutchins; Loren Einspahr; Michael Schroder; Dave Conley; Steve Gaither
Cc:	Patrick Davidson
Subject:	"Big Box" Store Analysis
Date:	Friday, April 25, 2025 10:36:00 AM
Attachments:	Home Dep Analysis-04252025102906.pdf image001.png image002.png image003.png image004.png

---

Good morning Mayor, Mayor Pro Tem, and Members of the Board of Trustees,

As you are aware, there have been a series of discussions within the community as to the practicality or possibility of a "big box" store in the area to help support the local economy. As is the case with any smaller municipality, there is a constant pressure as to whether roof-tops or commercial properties should form the bases of a local economy. While this analysis does not in any way address that broader issue, it should provide a method of the underlying economic and infrastructural requirements that a larger retailer likely would need to compete. The following analysis is for "Home Depot", and while it is not complete, it provides a look into the underlying requirements for such a business in Elizabeth.

Have a great weekend.

Patrick

Patrick G. Davidson, Town Administrator
151 S. Banner Street
Elizabeth, CO 80107
(720) 351-4504
pdavidson@townofelizabeth.org

TOWN OF ELIZABETH

PATRICK G. DAVIDSON, TOWN ADMINISTRATOR

TO: Honorable Mayor, Mayor Pro Tem, and Board of Trustees
FROM: Patrick Davidson, Town Administrator
DATED: April 24, 2025
SUBJECT: Analysis of a Home Depot or other "Big Box" commercial property within the greater Elizabeth community

INTRODUCTION

Recently there have been various discussions among members of the community, elected officials, and representatives of "Smart Growth Elizabeth" that have stressed the importance in securing a "Home Depot" or similar "big box" store in Elizabeth for tax stability. In the alternative, some have specifically dismissed any interest in a larger retail business, often citing impacts on locally owned businesses. The following data, using Home Depot as an example, should prove useful in discussing such a venture in Elizabeth.

BACKGROUND STAFFING DATA

Total Home Depot Retail Stores:	2,298[1]
Total Associates in US:	500,000
Ave. Associates per Retail Location:	218
Ave. Starting Wage Range:	$12.75 to $21.69/hr.
Minimum Customer Base:	55,000 households w/in 10-minute drive[2]
Colorado Retail Stores:	46[3]
Total Colorado Associates:	10,100[4]
Ave. Associates Per Colo. Location:	220
Ave. Colorado Starting Wage:	$16.05/hr.[5 6]
Minimum Customer Base:	50,000 households w/in 10-minute drive
Elbert County Households:	10,829 (2023 US Census Data)[7]
Elizabeth Households:	4,909 (10-mile radius *not* 10-minute drive)[8]

[1] https://corporate.homedepot.com/sites/default/files/2021_Q2_FastFacts.pdf#:~:text=The%20Home%20Depot%E2%80%99s%20total%20revenue%20for%202020%20was,Our%20tagline%20is%20%E2%80%9CHow%20Doers%20Get%20More%20Done.%E2%80%9D

[2] https://www.numerator.com/snapshots/home-depot/

[3] https://corporate.homedepot.com/sites/default/files/2023-10/Economic_Impact_2023_CO.pdf

[4] The term "Associates" does not include contract staffing within the Store, such as Loss Prevention, Human Resources, Janitorial Services, and other duties.

[5] https://www.indeed.com/cmp/The-Home-Depot/salaries?location=US%2FCO

[6] https://www.payscale.com/research/US/Employer=The_Home_Depot_Inc./Hourly_Rate

[7] https://censusreporter.org/profiles/16000US0823740-elizabeth-co/

[8] https://data.census.gov/all?q=80107

Total Population 80107:	13,766[9]

LEASE HOME DEPOT PROPERTY PROFILE AND CAP RATES (2020 DATA)[10]

U.S. Average Construction Price Range:	$10MM – $25MM
Cap Rate:	5.25%
Net Income:	$750,000
Price Per Square Foot (2020):	$150.00/sq. ft.
Building Size (2020):	100,000 sq. ft.
Lot Size:	12 Acres
US Average Store Size (2025):	119,500 sq. ft.
Colorado Average Store Size (2025):	104,000 sq. ft. store, 24,000 sq. ft. seasonal

ANALYSIS

Lot Location. The Abraham Lot is the only tract of land within the jurisdiction of Elizabeth that is of sufficient size to accommodate a "big box" store. The Abraham Lot lacks sufficient access points in which to provide for a "big box" store. Commercial property does exist along the Elbert County Economic Development Zone (EDZ) along HWY 86 that meets the overall space requirements and does not likely support sufficient fire flow through a water or sewer system.

Minimum Consumer Base. The Town of Elizabeth and the area within a 10-minute radius do not include enough households to meet the minimum criteria for a Home Depot. Presumably, it also would not meet the minimum requirements for other larger "big box" stores.

Construction Costs. The data found regarding the necessary land for a large retail structure was from a 2020 study of construction prices. These are inaccurate for 2025. Applying a simple CPI calculation to the 2020 construction costs increases the range to $12.4MM - $31MM for basic construction. This, of course, does not include required inventory for operations.

Compensation. With an average wage of $16.05/hr. for Home Depot employees, the annual salary for a new associate is approximately $33,384/yr. The average salary for a resident in Elizabeth is $57,470/yr. with a median household income of $129,668/yr. At the wage rate of $16.05/hr., the household would be eligible for WIC, supplemental income services, and the Colorado Health Service Corp, i.e. "welfare".[11] This is often referred to as the "Walmart Syndrome" wherein low overall compensation leaves workers unable to meet daily necessities, thereby forcing employees to seek public assistance.[12]

---

[9] https://data.census.gov/all?q=80107
[10] https://www.bouldergroup.com/blog/net-lease-home-depot/
[11] https://cdphe.colorado.gov/federal-poverty-level-calculator
[12] https://moneymorning.com/2013/06/13/how-the-wal-mart-syndrome-pushes-millions-more-onto-food-stamps/

Housing. Referring to the February 7, 2025, Weekly Update, I provided an updated housing analysis for the Elizabeth area. That information was as follows:

> Zillow lists the median sale price within Elizabeth at $663,882 and Realtor.com lists the median home price at $666,900. Using the Realtor.com median, and applying a 30-year mortgage, 20% down, HOA fees, taxes, and 6.750% interest, the monthly mortgage payment remains quite high in Elizabeth at approximately $4,250/month [$51,000 annually]. With the median household income in Elizabeth being $129,668,00, housing will continue to remain an issue.

In looking to housing availability within the area of Elizabeth, combined with housing costs, it is financially unlikely that an employee at "Home Depot" or a similar organization would be able to find housing within Elizabeth or the surrounding area. As such, the prospective business would need to attract employees from outside of Western Elbert County to staff such a store. It is unlikely that prospective employees would be willing to commute from larger communities in the Denver-Metro Area to earn less compensation to work in Elizabeth.

Elizabeth Housing Capacity. According to the Elbert County Housing Needs Assessment (October 2022) the average number of residents per household is 2.63. Applying the average number of associates per Colorado Home Depot store to the average number of residents per household in Elbert County, it would be estimated that an additional seventy-six (76) residential units would be required to meet the housing needs of store associates alone.[13] As indicated in footnote 4, the term "Associate" does not include contract positions within each individual retail location.

[13] This is a simplistic analysis of the extent housing may be required. There are possibilities of positions being filled by those in the greater Elizabeth area entering the workforce, those already in the area that are changing positions or careers, or other factors. This calculation is used for comparative purposes only in analyzing potential housing concerns associated with a large commercial retailer in the area.

From:	Patrick Davidson
To:	Angela Ternus; Tracy Hutchins; Loren Einspahr; Michael Schroder; Dave Conley; Steve Gaither
Cc:	Patrick Davidson; Alexandra Cramer; Michael DeVol
Subject:	Update Memo on PROST Plans for Town
Date:	Wednesday, May 7, 2025 8:49:00 AM
Attachments:	image001.png image002.png image003.png image004.png PROST Memo to Board 5-6-2025-05072025083834.pdf

---

Good afternoon, Mayor, Mayor Pro Tem, and Members of the Board of Trustees.

The topic of the parks, trails and open space was discussed quite briefly during the May 3rd workshop. Because the project is ending, I wanted to be able to answer any questions you might have on the overall project. I know there were some concerns about aspects of the plan that could take place in the County, as compared to suggestions within the Town. Hopefully, the attached memorandum will provide some additional information going forward.

In addition, I would note that from your 2025 Strategic Planning Report, Item ST No. 24.12 reflects a desire to upgrade Running Creek Park, and items 25.13 which states a desire to develop a plan for the South 40. Both items are addressed specifically within the PROST plans and report and therefore are relevant to furthering the goals in the Strategic Plan.

With this information provided, it may be ideal to discuss these matters as part of the overall budget process for either inclusion in 2026 or in 2027. I would note that the 2025 budget calls out for $60,000 to be spent from the Capital Improvement Fund for improvements to Wade Park. Perhaps those funds should be held back pending a further discussion of this matter?

Have a great day!

Patrick

Patrick G. Davidson, Town Administrator
151 S. Banner Street
Elizabeth, CO 80107
(720) 351-4504
pdavidson@townofelizabeth.org

TOWN OF ELIZABETH

PATRICK G. DAVIDSON, TOWN ADMINISTRATOR

TO: Honorable Mayor Ternus, Members of the Board of Trustees
FROM: Patrick Davidson, Town Administrator
Alex Cramer, Planner / Project Manager
DATED: May 6, 2025
SUBJECT: Update on the PROST Discussion from the Board Workshop

---

BACKGROUND

On Saturday, May 3, 2025, the Board of Trustees held a Board Workshop to discuss the 2025 Strategic Planning Report that was completed by Todd Leopold with CIVICATE. Late within the meeting's discussions, concerns were raised regarding the *Parks, Recreation, Open Space & Trails Master Plan* (PROST). Unfortunately, Town Staff was not prepared to discuss this matter in detail, as the *Plan* was not specifically identified in the 2025 Strategic Planning Report. With this in mind, it is appropriate to clarify a couple of comments that were made about the process, and how the Town could benefit from the overall study.

This process began as a combined collaboration between the Town of Elizabeth, the Elizabeth Parks and Recreation District, and the Elizabeth School District. As a Great Outdoors Colorado [GOCO][1] funded initiative, it was vitally important to undertake as broad of a planning process as possible, recognizing the future grant eligibility for any or all of the projects identified in the Plan would require a combined effort in the future. Below are examples of the steps undertaken by Staff to combine their efforts for a successful partnership.

In determining what is sought by the citizens in Elizabeth, as well as those broader community residents of the Elizabeth Parks and Recreation District, and the Elizabeth School District, it was important to have as much contact as possible with the public. In that regard, all who have worked on this project are very complementary of the consultant team and what they have been able to accomplish.

The consultant team has gone beyond standard outreach by attending community events including the Boo Bash and Mayor's Tree Lighting, hosting an open invitation night at Elizabeth Brewing Company, and conducting two community-wide workshops. They have actively engaged with student council and formed a committee of interested students for the master planning process. They've also built relationships with student council, teachers within the high school, and the high school catering program that the Community Development Department can utilize

---

[1] Great Outdoors Colorado [GOCO] is an independent entity which receives funding from the Colorado Lottery for preservation and enhancement of parks, trails, wildlife, rivers, and open spaces. Since 1992, GOCO has invested $1.4BN in outdoor projects in Colorado.

▪ PO Box 159, 151 S. Banner Street ▪ Elizabeth, Colorado 80107 ▪ (303) 646-4166 ▪ Fax: (303) 646-9434 ▪
www.townofelizabeth.org

far beyond this master plan process. In fact, we are using the high school catering program for the Main Street networking event next week, which will be the students' final exam for the year.

Additionally, mailings were sent to every household in the EPR district and posted in the newsletter that goes to every town resident about the first community workshop. These communications invited the public to visit the master plan website for updates to the planning process and to reach out to our team if they would like to be included in an email or mail subscription for updates.

In keeping with the idea of community output and community insight to the design process, the following entities and organizations have, at a minimum, had many opportunities to participate in the entire process. In addition, representatives and citizens have participated in the process from these groups:

Governmental Entities:

- Town of Elizabeth Community Development Department
- Elizabeth Park and Recreation District Board
- Elizabeth School District
- Town of Elizabeth Board of Trustees
- Town of Elizabeth Planning Commission
- Town of Elizabeth Public Works Department
- EPR Maintenance
- Main Street Board of Directors
- Historic Advisory Board
- Elbert County Commissioners
- Elbert County Planning Department
- Elizabeth Pines and Plains Library District

Recreational Entities:

- Elbert County Wranglers
- Colorado Bowhunters Association

Civic and Community Organizations:

- American Legion Post 82
- Daughters of the American Revolution – Running Creek Chapter
- Elizabeth Chamber of Commerce
- Dads of Elbert County
- Elizabeth High School Student Council
- Colorado Bowhunters Association
- Elizabeth Senior Luncheon Group
- Local Churches

Districts/HOA/Subdivisions:

- Cimarron

- Elizabeth in the Pines
- CB Independence Holding Co LLC
- Spring Valley Metropolitan Districts
- Sun Country Meadows HOA
- Wild Pointe Ranch HOA
- Legacy Village
- Gold Creek Valley
- Hillside Village

ANALYSIS

The Project website has been active for over the last eight (8) months, allowing the public to view the revisions and plans that have been proposed and amended over that time. The link to the project is provided here: https://scj.mysocialpinpoint.com/GreaterElizabethPROST. As a project that covers the jurisdiction of the Town of Elizabeth, as well as the jurisdictions of the Elizabeth Parks and Recreation District, and the Elizabeth School District, it is important to note that the Town has a limited geographic area involved in the broader design.

For the Town of Elizabeth, the scope is somewhat limited to the following concept designs:

Running Creek Park – The plans for Running Creek Park recommend a permeable paver area for vendors, food trucks, and related operations. It also recommends a small playground with minimal park features. Finally, the plans call for a sloped lawn area to create an area for the stage to be completed. These plans are nearly identical to prior discussions and are designed to maximize the opportunities and flexibility of this parkland.

South 40 – The plans for the South 40 are consistent with prior direction to establish a natural surface trail system within the area. The plan also includes potential locations for a restroom facility, picnic shelter, and parking lot. Furthermore, these are discussions that have been previously entertained for improvements to the South 40, while having nominal impact to the overall area.

Linear Park (near schools) – The Board of Trustees has actively sought to have student participation in government operations. This is demonstrated by having a Student Liaison on the BOT, Staff working with students in the schools, internships, and volunteering for such items as the Homecoming Parade. It is within this vein that the Linear Park design was undertaken. Representatives of Elizabeth High School and their siblings played an active role in the design of this parkland and included the amenities that were being sought by the youth of the community.

Town Trail Map – The plans call for the possibility of trails not only within the Town of Elizabeth, but also along the greater jurisdictional boundaries of both the Elizabeth Parks and Recreation District and the Elizabeth School District. For purposes of these plans, the focus of the Board of Trustees should be somewhat limited to what is being sought and recommended within the Town

itself, fully recognizing the prospects of interconnection if, and when, the public makes this development a priority.

Bandt Park – The proposed amendments to Bandt Park not only center on repair and replacement of existing infrastructure but also incorporates those recommended features to create a modern multi-program park facility. Many of these changes will expand on the steps already taken to make the park more ADA accessible. The proposed changes also expand the playground for ages 5-12 years old, additional pathways and trails, and hard surfaces for pickleball, basketball, tennis, and volleyball.

It is important to recognize that the overall PROST Plan does have substantial economic opportunities for all three (3) of the entities, particularly in terms of grants from GOCO[2]. Further, while all members of the public, or even members of the Board, may not agree with each and every item identified in any area, it does not dismiss the desire by others to have those improvements in the community.

Lastly, it is also important to note that the failure to obtain a resolution adopting this plan, as generally presented, will likely have substantial implications on the partner agencies who assisted in bringing this Plan to completion.

STAFF RECOMMENDATION

As this project is ending, Staff needs to be made aware of specific comments, suggestions, or questions the Board may have regarding these concepts.

Additionally, Staff welcomes any comments, suggestions, questions, and constructive criticism on how this master planning process could have been even more successful—especially considering the Board's aspirations to undertake a comprehensive plan in the next year. Staff strongly believe the engagement process and informational options provided served as a valuable reference for future long-range planning initiatives for many years to come.

BUDGET CONSIDERATIONS

None. Informational Purposes Only.

ATTACHMENTS

Concept Drawing for Running Creek Park
Concept Drawing for South 40
Concept Drawing Linear Park (near High School and Middle School)
Concept Drawing for Town Trail
Concept Drawing for Bandt Park

---

[2] GOCO operates within a broader 5-year budget plan as well as a 1-year budget plan. For FY2024-2025 GOCO expects total revenue in the amount of $86,857,350 and expenditures of $72,000,102. With a deficiency of public lands in Elbert County, there is a strong likelihood that grant funding will be available in the future as part of this PROST project.

Existing
Town Trail
Permeable Paver Event
Plaza (food trucks,
vendors, tents etc.)
Picnic Shelter
Playground with
embankment
play features
Portable
Restrooms
Min. 10' Wide
Paved Path
Sloped Lawn
Stage
Detention
(construction
in progress)
Parking Lot
(construction
in progress)
N

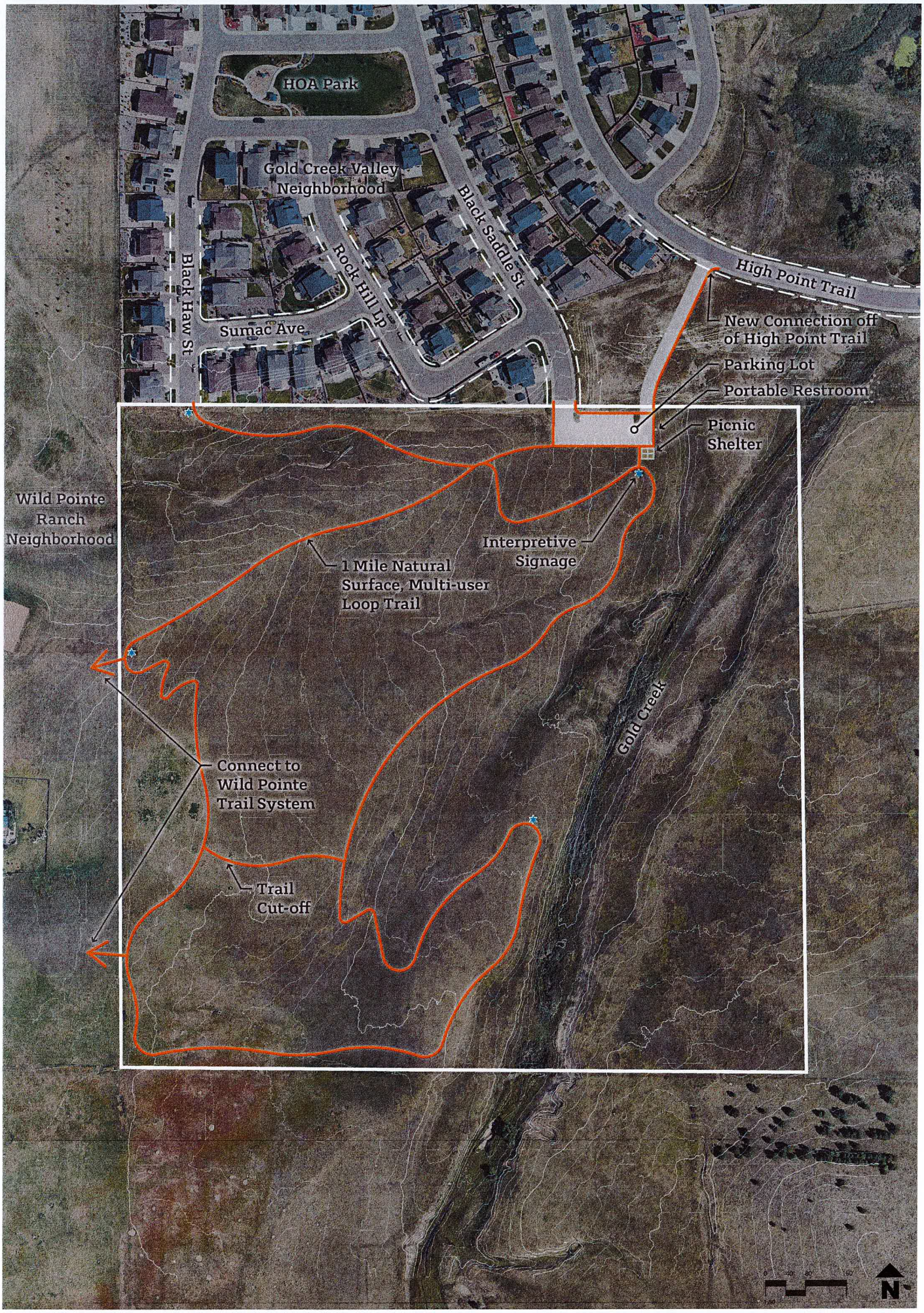
HOA Park
Gold Creek Valley Neighborhood
Black Haw St
Rock Hill Lp
Black Saddle St
Sumac Ave
High Point Trail
New Connection off of High Point Trail
Parking Lot
Portable Restroom
Picnic Shelter
Wild Pointe Ranch Neighborhood
Interpretive Signage
1 Mile Natural Surface, Multi-user Loop Trail
Gold Creek
Connect to Wild Pointe Trail System
Trail Cut-off
N

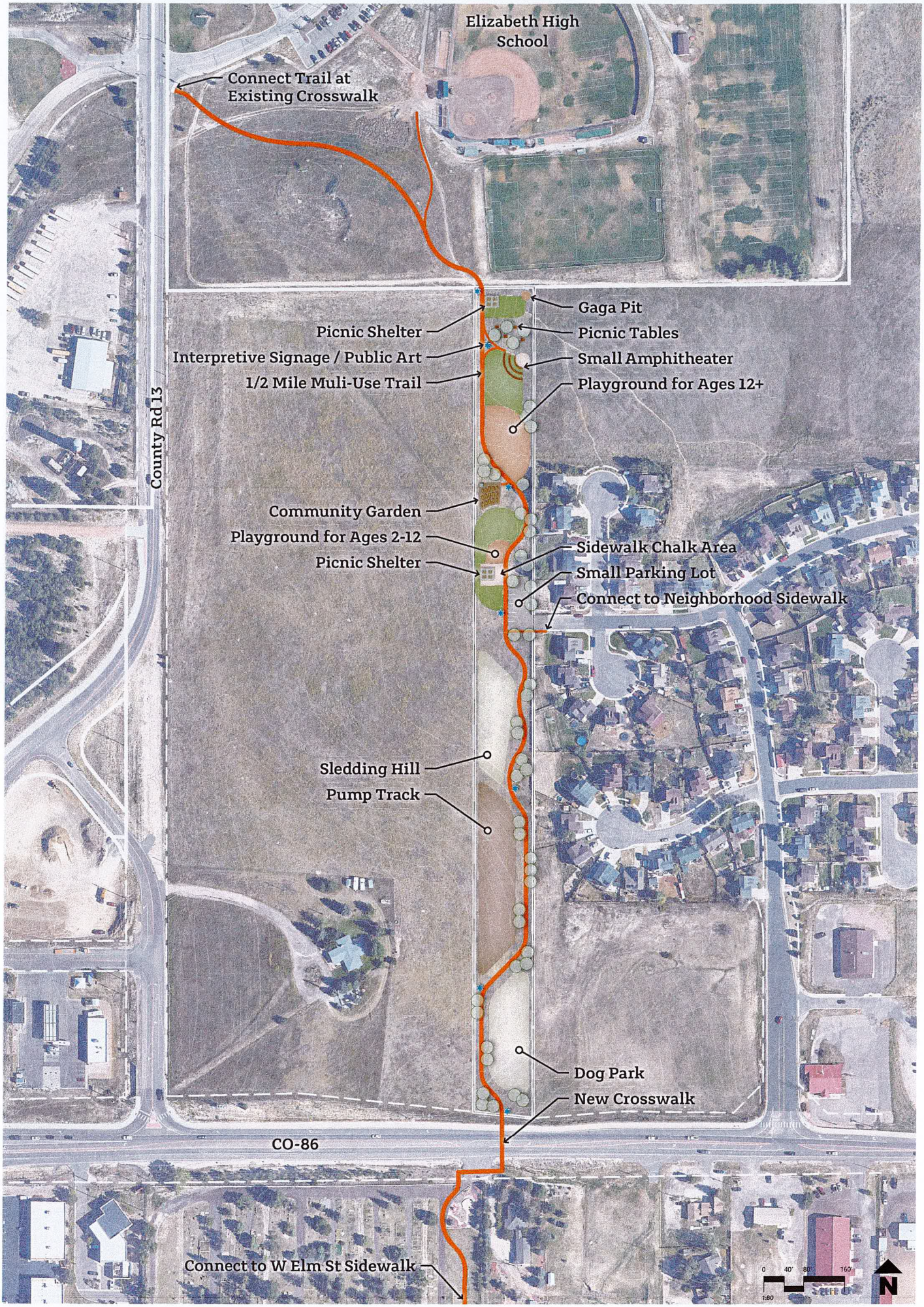
Elizabeth High School
Connect Trail at Existing Crosswalk
Gaga Pit
Picnic Shelter
Picnic Tables
Interpretive Signage / Public Art
Small Amphitheater
1/2 Mile Muli-Use Trail
Playground for Ages 12+
County Rd 13
Community Garden
Playground for Ages 2-12
Sidewalk Chalk Area
Picnic Shelter
Small Parking Lot
Connect to Neighborhood Sidewalk
Sledding Hill
Pump Track
Dog Park
New Crosswalk
CO-86
Connect to W Elm St Sidewalk
0 40' 80' 160'
1:80
N

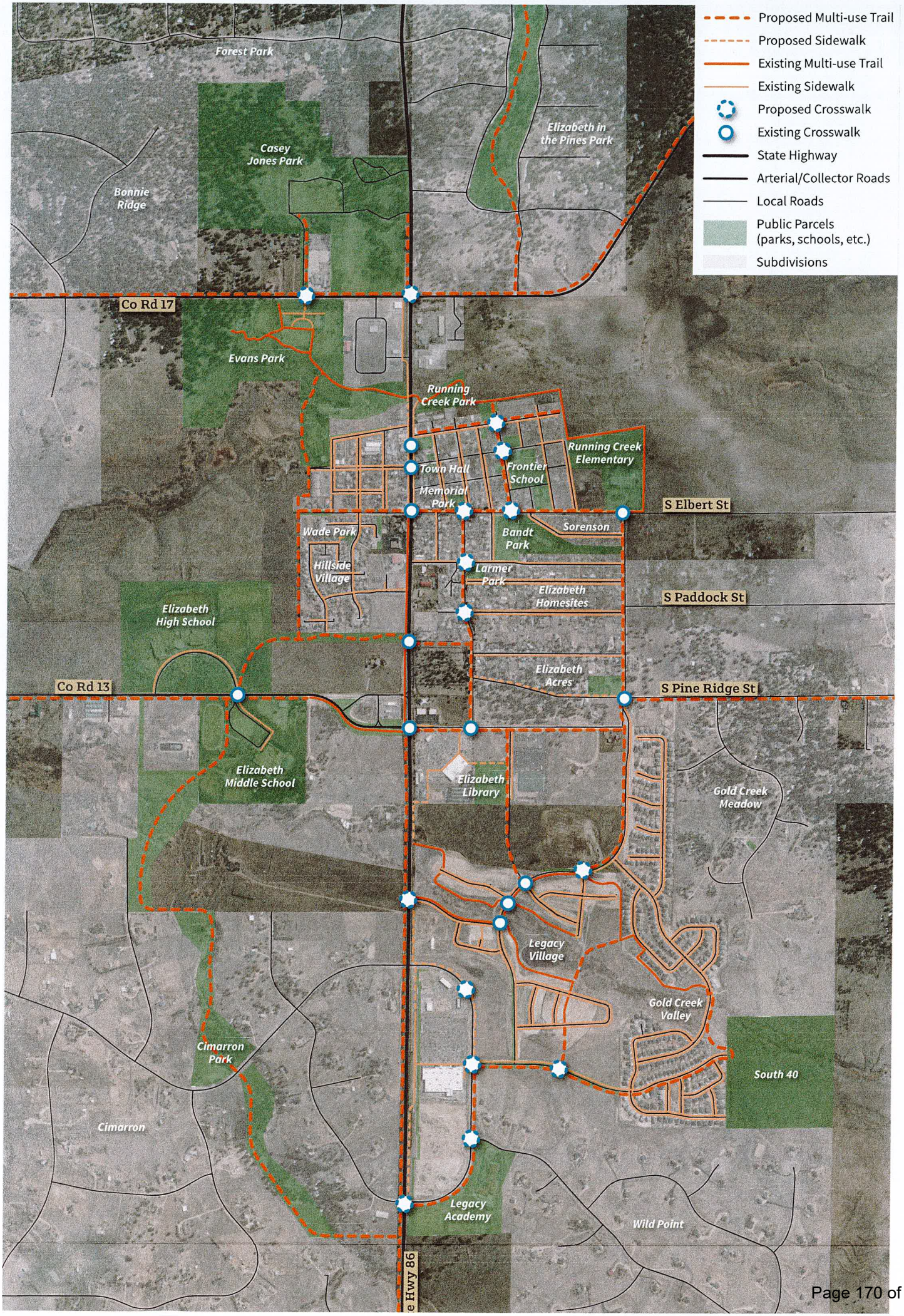
Proposed Multi-use Trail
Proposed Sidewalk
Existing Multi-use Trail
Existing Sidewalk
Proposed Crosswalk
Existing Crosswalk
State Highway
Arterial/Collector Roads
Local Roads
Public Parcels (parks, schools, etc.)
Subdivisions
Forest Park
Casey Jones Park
Elizabeth in the Pines Park
Bonnie Ridge
Co Rd 17
Evans Park
Running Creek Park
Running Creek Elementary
Town Hall
Frontier School
Memorial Park
S Elbert St
Wade Park
Bandt Park
Sorenson
Hillside Village
Larmer Park
Elizabeth Homesites
S Paddock St
Elizabeth High School
Elizabeth Acres
Co Rd 13
S Pine Ridge St
Elizabeth Middle School
Elizabeth Library
Gold Creek Meadow
Legacy Village
Gold Creek Valley
Cimarron Park
South 40
Cimarron
Legacy Academy
Wild Point
e Hwy 86

EXISTING DETENTION
SEASONAL SLEDDING HILL
NATIVE PLANT DEMONSTRATION GARDEN W/ SEATING AREAS
INTERPRETIVE NATURE PLAY AREA
AGE 5-12 PLAYGROUND
PROPOSED CONCRETE WALKS (ADA)
UPGRADED RESTROOM
NEW PARK SIGN
APPROXIMATE LOCATION OF NEWER CONCETE WALK
VOLLEYBALL (X2)
BASKETBALL
TENNIS
NATURAL SURFACE TRAIL
PICKLEBALL (X4)
SEATING NODE

TO: Honorable Mayor, Mayor Pro Tem, and Board of Trustees
FROM: Patrick Davidson, Town Administrator
DATED: April 24, 2025
SUBJECT: Review of Discussion of Wards within the Town of Elizabeth

---

BACKGROUND
Initial discussions regarding the possible creation of Wards within the Town of Elizabeth began on February 10, 2024, during the Board's Vision Meeting. Based on direction provided by the BOT, additional research and consideration was undertaken by the Town Attorney, the Town Administrator, and the Town Clerk to determine the legality, as well as the practicability, of creating a Ward System in Elizabeth. The stated purpose by members of the Board of Trustees was to ensure that with growth in the community, no single area or subdivision of the Town could dominate the elected positions within the municipality.

The timing of the approval of the Ward System was pivotal to the overall decision by the Board of Trustees. Generally, a ward or voting district system is established upon creation of the municipality and is not later established. However, with six (6) of the existing seven (7) seats open during the November 2024 General Election, it provided Elizabeth with a once in a generation opportunity to create a Ward System.

With information provided by the Town's Community Development Department, a potential map was developed to establish wards, which would take into consideration estimated population growth in each hypothetical ward. Additionally, other communities were contacted to consult on the operation of the ward system, area elections, and the feasibility of wards within the Town of Elizabeth. Ultimately, legal opinions provided guidance to the Board members on how the process would or could be undertaken.

On April 23, 2024, the Board of Trustees passed Resolution 24R16 on a 5-2 vote to adopt the creation of Wards within the Town of Elizabeth. In addition, on that same date, the Board of Trustees approved Ordinance 24-03 on a 5-2 vote to codify the process and establish Wards. The Ordinance was not challenged by Referendum and became effective on May 23, 2024. The November 2024 General Election then included Wards for purposes of the election to the Town Board of Trustees.

ANALYSIS
Methods of Establishing Wards or Voting Districts. The Board of Trustees chose to implement a Ward System consisting of a Mayor-at-Large and two (2) representatives from each Ward. Those representatives, after 2026, would hold rotating 4-year seats within their respective Wards.

Other communities have chosen to use a hybrid ward system such as: (1) the division of the community into wards, with the mayor and *three* trustees holding at-large positions, while the remaining members of the Board be limited solely to wards; (2) the use of districts where portions of the community are divided into districts with only one member of the Board of Trustees being elected by any one district; (3) the division of the community into wards, with the mayor and three trustees holding four-year terms, while the remaining members of the Board serve shorter terms within their respective wards, or vice-a-versa. Ultimately, each system is designed to distribute power across numerous elected officials and create a greater degree of accountability for each elected official.

Costs of Elections, Special Elections, and Recalls. A key provision through the establishment of the Ward System is that it limits the costs for the municipality in conducting special elections and recall elections. Only residents within their specific ward are allowed to petition, vote, and conduct either a special election to fill an open seat, or to conduct a recall election. In the case of Elizabeth, it would reduce costs by approximately 50% opposed to conducting the same under the prior organization of the Town.

Accountability to the Elected Officials' Constituents. Under the Ward System, a closer relationship is established between members of the Ward and their individual representatives. Elected officials live and campaign within their own neighborhoods and are directly accountable to those within their neighborhood. Representatives of a specific ward are in the best position to advocate for the specific needs of their ward, while still understanding the overall needs of the community.

Future Growth and Development of the Town. Regardless of one's political approach towards growth and development within Elizabeth, there remains development projects which have already been approved by prior Boards. These include the Pine Ridge Apartments (est. 126 new residents); Walnut Street PUD (est. 116 new residents); Winchester Estates (est. 20 new residents); Gold Creek Commons (est. 460 new residents); and the Abraham Property. As such, the creation of wards not only considers the current makeup of the community but also anticipates growth and development in the future and creates the most equitable means of ensuring the impacts of votes in the future.

Influence and Control by Specific Subdivisions. A concern raised by the prior Board of Trustees was the overall influence that the development of the Gold Creek Subdivision, the Legacy Subdivision, and the anticipated development of Gold Creek Commons would have on the community. If appropriately organized, the Gold Creek and Legacy Subdivisions have a sufficient voter base to control all seats within the Town of Elizabeth.[1] Assuming the lowest anticipated

[1] In advance of the Board's April 2024 action there were comments circulated which included: the use of Town reserves to pay-down the metro district bonds held within the Gold Creek Subdivision (to reduce property tax bills) and to convey park lands to the Town to reduce HOA assessments related to park and open space maintenance. These actions could be accomplished depending on the underlying make-up of the Board of Trustees.

growth of Gold Creek Commons, including approximately 460 new residents, the three subdivisions combined could dominate Town elections. The Ward System assists in maintaining a representative democracy within the Town of Elizabeth.

Existence of Wards in Colorado. Through the deliberative process there were questions about whether any small towns in Colorado even made use of a Ward System. The table provided below provides information related to other small communities within Colorado that use a Ward System. For the Town of Elizabeth, three population examples are provided. First, the population numbers are from the website titled www.worldpopulationreview.com. This likely provides the lowest currently published population count for Elizabeth at 2,980 residents. The second entry in the table provides the population data used on the water/wastewater estimates supplied by the Town. The population using this analysis is 3,300. Finally, the third entry is based on known and anticipated development within the Town of Elizabeth within the next three (3) years.[2]

Municipality	Population	Type of Ward System
Georgetown	1,350	3 Wards, Mayor-at-Large
Las Animas	2,424	3 Wards, Mayor-at-Large
Elizabeth	2,980	3 Wards, Mayor-at-Large
Walsenburg	3,109	3 Wards, Mayor-at-Large
Elizabeth	3,300	3 Wards, Mayor-at-Large
Florence	3,876	3 Wards, Mayor-at-Large
Manitou Springs	4,452	3 Wards, Mayor-at-Large
Elizabeth	4,700	3 Wards, Mayor-at-Large
Brush	5,224	3 Wards, Mayor-at-Large
Castle Pines Village	5,577	3 Wards, Mayor-at-Large
Sheridan	5,777	3 Wards, Mayor-at-Large
Salida	6,032	3 Wards, Mayor-at-Large

As always, it is important for the Board of Trustees and for Staff to anticipate growth and development well in advance of what is currently existing within the community. As such, it is recommended that the 4,700-population count be considered appropriate within the broader ward analysis.

STAFF RECOMMENDATION

As this decision is ultimately a policy decision and is political in nature, Staff take no position.

BUDGET CONSIDERATIONS

Unknown. The costs of remaining within a Ward System are likely none. A transition back to an "at-large" structure will include the costs of conducting elections during the next General

[2] Updated population information from the State Demographer is through 2023 and states the Town's population of 2,304 while the U.S. Census' data is through 2023 and lists Elizabeth as having 2,477 residents. Neither set of figures is particularly helpful to the overall analysis.

Election, the prospects of a Referendum Election, and other potential, but currently unknown costs.

ATTACHMENTS
None.

TOWN OF ELIZABETH

PATRICK G. DAVIDSON, TOWN ADMINISTRATOR

TO: Honorable Mayor Ternus, Members of the Board of Trustees
FROM: Patrick Davidson, Town Administrator
DATED: May 7, 2025
SUBJECT: Development Sketches for 601 Pine Ridge – Regarding the footprint of the proposed Community and Senior Center

BACKGROUND

On Saturday, May 3, 2025, the Board of Trustees met with Town Staff to discuss the decisions made during the Board's 2025 Strategic Planning Workshop. One of the items identified by the Board as being a priority is the previously discussed Community and Senior Activity Center. During these conversations, partial directions were given to proceed with some development of the project, and a discussion of project locations. One of the items identified was whether the property at 601 Pine Ridge could be used for such a location, and if chosen, how it would be used.

Of specific discussion was the potential placement of the Community and Senior Activity Center at 601 Pine Ridge Street. This property, acquired by the Town of Elizabeth in 2024, was identified by the prior Board of Trustees as meeting the needs for the development of the project. Specifically, the following conditions were identified behind the acquisition of this property for Town development: (1) general location within the geographic center of the Town of Elizabeth; (2) access to Elizabeth Street for access to CR136, CR13, and HWY 86; (3) economical access to the Town's water and wastewater systems; (4) elevation for telecommunications and emergency services access; and (5) ease of access with possible controlled intersections. In addition, the minimum lot size being sought by the Board of Trustees was at least 5 acres.

ANALYSIS

In anticipation of the land acquisition in 2024, Staff was asked to provide several schematic plans which would give a general overview of the property. Attached are 2 concepts prepared by the Community Development Department to address the lowest possible density for the property and the highest possible density for the property. These are attached and discussed as "Option A" and "Option B" and are as follows:

Option A. Option A sought to provide a minimal approach to the development of 601 Pine Ridge. It anticipated only a portion of the 5+ acres to actually be developed, while maximizing the amount of undeveloped / open space that could be maintained. This design would leave the existing single-family residence and associated garage and would also leave the existing shop for Public Works' storage and usage.

As designed, it would provide the prospects for additional expansion of the Center into the future but would keep the vast majority of trees and open spaces to the North, South, and East of the

Center. This area, likewise, could be used for additional park or recreational space in and around the Center.

Option B. Option B sought to maximize development of the full 5+ acres, while still allowing for the establishment of the Community and Senior Activity Center. The location of the Center itself would remain unchanged. In addition, the existing house with detached garage, as well as the shop for Public Works would remain unchanged.

However, the development of this property would include at least four (4) additional lots to be either sold or developed for single-family residences as well as the prospects of three (3) additional tracts that could be used for commercial enterprises. Under this scenario, the goal was to maximize development of the area for the financial benefit of the Center itself. The resulting funds from the subdivision of the tracts could then be used to establish a basis [perhaps a foundation] for the long-term upkeep and maintenance of the facility.

STAFF RECOMMENDATION
No recommendation is provided. This is for background and discussion purposes only.

BUDGET CONSIDERATIONS
N/A

ATTACHMENTS
Option A: Minimalist approach to the development of the Center at 601 Pine Ridge
Option B: Maximizing approach to the development of the Center at 601 Pine Ridge
Memorandum Regarding Land Acquisition (Dated September 13, 2024)

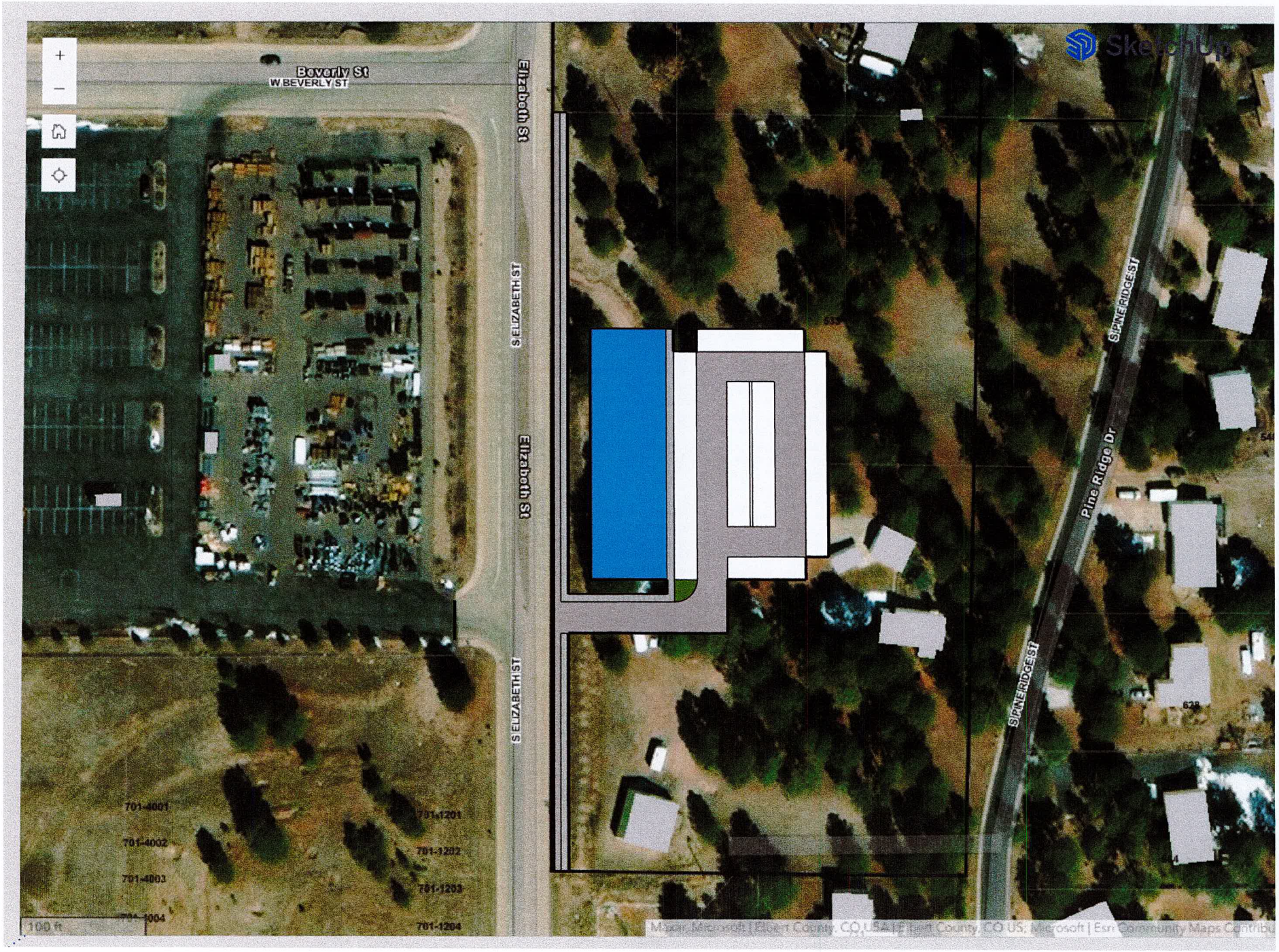
SketchUp
S PINE RIDGE ST
Pine Ridge Dr
S PINE RIDGE ST
Elizabeth St
S ELIZABETH ST
Elizabeth St
S ELIZABETH ST
Beverly St
W BEVERLY ST
701-4001
701-4002
701-4003
701-4004
701-1201
701-1202
701-1203
701-1204
100 ft
Maxar, Microsoft | Elbert County, CO USA | Elbert County, CO US; Microsoft | Esri Community Maps Contribu

OPTION A

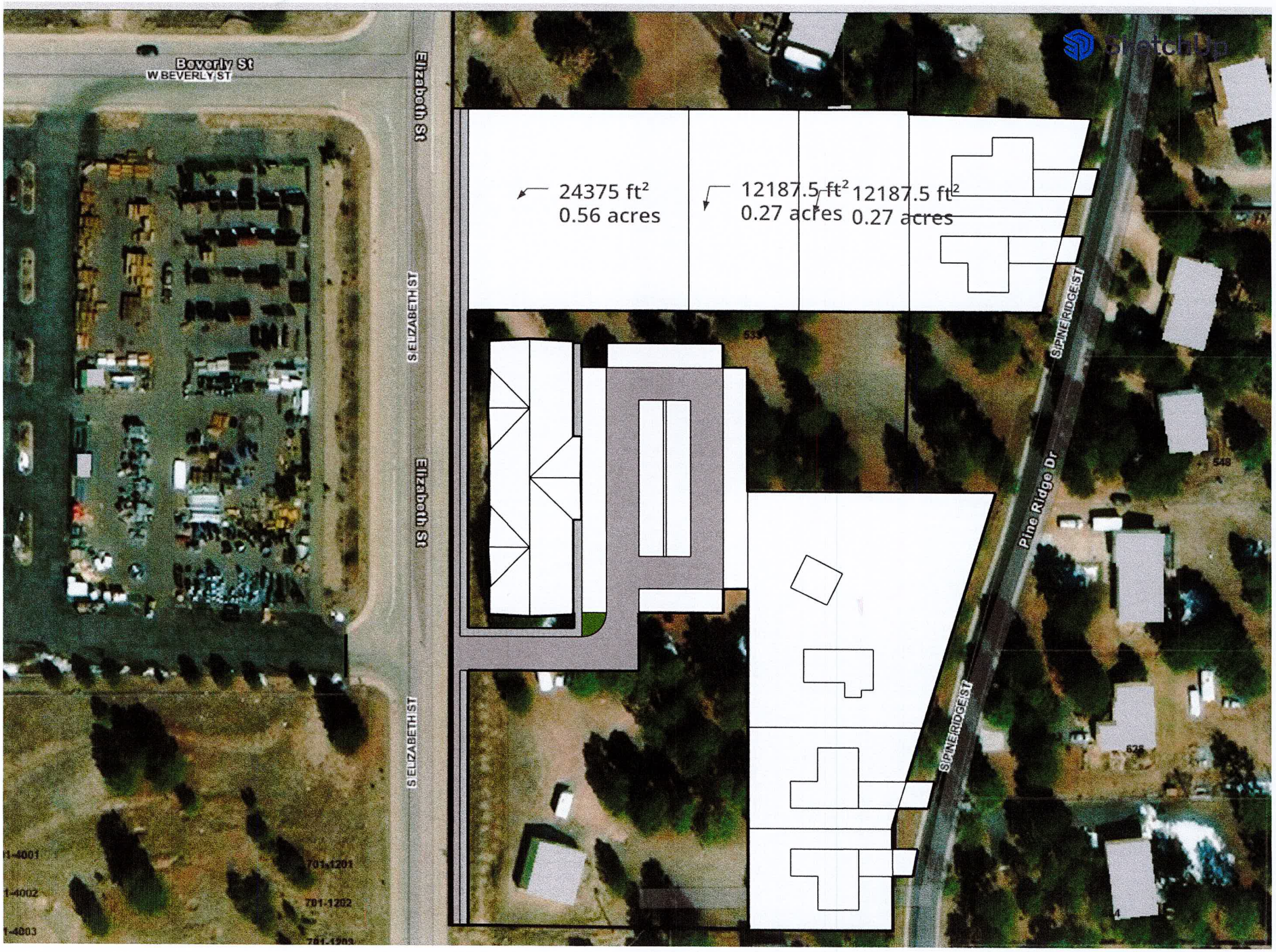
SketchUp
Beverly St
W BEVERLY ST
Elizabeth St
S ELIZABETH ST
Elizabeth St
S ELIZABETH ST
24375 ft²
0.56 acres
12187.5 ft²
0.27 acres
12187.5 ft²
0.27 acres
SPINE RIDGE ST
Pine Ridge Dr
SPINE RIDGE ST
701-1201
701-1202

OPTION B

TOWN OF ELIZABETH

PATRICK G. DAVIDSON, TOWN ADMINISTRATOR

TO: Honorable Mayor, Mayor Pro Tem, and Members of the Board of Trustees
FROM: Patrick Davidson, Town Administrator
DATED: September 13, 2024
SUBJECT: Land Acquisition 601 S. Pine Ridge Road, Elizabeth

In working with the Public, Town Staff receive dozens of questions and comments per week which are not only of interest to the citizen but might also be useful for the community as a whole. Below are the most recent questions/concerns and the Staff's responses.

RESPONSE TO CITIZEN CONCERNS

PURCHASE OF PROPERTY LOCATED AT 601 SOUTH PINE RIDGE STREET.
The Town of Elizabeth has previously sought a more central location in which to establish a Town Hall facility which would also include sufficient space for the Elizabeth Police Department. The Town had previously sought to collaborate with the owners of the Elizabeth 44 property to create such a centralized location. The attempts proved unsuccessful.

After lengthy discussions with the Board on several occasions, a general consensus was reached by the Board that certain conditions should exist for the establishment of a new Town Hall and a Community and Senior Center. The following considerations were deemed important if not required for future sites. These included: (1) general location within the geographic center of the Town; (2) access to Elizabeth Street for access to CR136, CR13, and HWY 86; (3) economical access to the Town's water and wastewater systems; (4) elevation for telecommunications, emergency services access; and (5) ease of access with possible controlled intersections. In addition, the minimum lot size was to be at least five (5) acres in size.

Very few tracts of land within the overall boundaries of the Town of Elizabeth meet these criteria. The property located at 601 South Pine Ridge is actually a total of four (4) smaller lots, two located within the County, and two located within the Town. Combined, they meet the conditions deemed important by the Board of Trustees.

With the recent disconnection of Elizabeth West, the prices for both developed and undeveloped land have increased. The basic driving factor in these price changes are due to the scarcity of land arising from voter initiative. In making a price determination, the Town consulted outside real estate experts, as well as the Town's own data in determining the valuation of the property.

These are the general findings:

- The Elizabeth 44/Abraham Lots are estimated to sell in the range of $250,000/acre. At that rate, the purchase price would be $1,250,000.

- The property located at 889 South Elizabeth Street had a purchase price of $500,000/acre based on a 6/1/2023 *Special Warranty Deed*. In this instance, the total purchase price of five (5) acres would be $2,500,000.[1]

- The general price for property located in Crossroads is approximately $325,000/acre. At that price per acre, the total for five acres would be $1,625,000.

- The property located on Garland Street, in the flood zone located next to Running Creek, is currently listed at $193,000/acre. Assuming the lot was large enough for the Town's needs, the anticipated purchase price would be $965,000.

- The lots at Wild Pointe Marketplace (immediately outside the Town of Elizabeth) are averaging $679,504/acre, for a theoretical purchase price of $3,397,523 for five acres.

Averaging the per acre prices established above, ***the average cost per acre is $389,500 per acre***. The Town has acquired the property located at 601 South Pine Ridge Street at the price of ***$163,291 per acre***, for a final purchase price of $895,000.

Until future plans are finalized, the property will remain as a single-family residence from which the Town will receive monthly rental payments. Additionally, the existing shop and garage spaces will provide immediate relief for storage concerns existing at current Town facilities. Contrary to the comments made on social media, the Town is <u>not</u> responsible for any property taxes on these tracts, and until annexation of the County tracts, is not subject to the requirement of installation of Town water and wastewater services. Those services will be implemented upon full annexation and construction of future facilities. Additionally, to the extent adjudicated, the Town receives the water rights in the transaction to add to its holdings.

Finally, as is the case in real estate transactions, the Buyer's commission (the payment to the Town's representative/realtor) comes from the proceeds from the sale of the property and is <u>not</u> paid by the Town. Any inference that the Town directly paid the realtor for this transaction is incorrect.

[1] The close proximity of this property to the property located at 601 South Pine Ridge Street (with access off Elizabeth Street) is noteworthy to the analysis.

REQUEST FOR PROPOSALS
Facilities Master Plan for the Town of Elizabeth

Issued: June 27, 2025

DEADLINE FOR PROPOSALS:
August 27, 2025
4:00 P.M. Local Time

Request for Proposals
Town of Elizabeth
Facilities Master Plan

TABLE OF CONTENTS

SECTION I: GENERAL INFORMATION
1.1 Invitation……..3
1.2 Background……3
1.3 Project Goal……4
1.4 Schedule of Events……4

SECTION II: SCOPE OF WORK TO BE PERFORMED BY CONSULTANT
2.1 Scope of Work……..4
2.2 Schedule of Work……7

SECTION III: PROPOSAL REQUIREMENTS
3.1 Proposal Instructions……8
3.2 Questions……8
3.3 Consultant Selection Process……8

SECTION IV: APPENDICES
4.1 Sample of Professional Services Agreement……10

Request for Proposals
Town of Elizabeth
Facilities Master Plan

SECTION I: GENERAL INFORMATION FOR THE REQUEST FOR PROPOSAL

1.1 Invitation

The Town of Elizabeth, Colorado is seeking qualified Consultants to submit responses to this Request for Proposals (RFP) for a Public Facilities Master Plan. The Public Facilities Master Plan will include a detailed analysis of current and future needs, recommendations to meet these needs, and conceptual designs and cost estimates for the recommended improvements. The deadline for submission of proposals is August 27, 2025. A copy of the complete Request for Proposals is available on the Town's website at: http://www.townofelizabeth.org.

1.2 Background

The Town of Elizabeth, incorporated in 1890, is a Colorado Statutory Town operating under a Council-Manager form of government. With a population of approximately 3,300, Elizabeth is the largest incorporated municipality in Elbert County. The Town continues to see residential and commercial growth, with an anticipated population of over 5,000 by 2028.

The Town provides the following services: police, municipal court, code enforcement, public works, planning, and zoning, building services, general governmental services, parks management, water, and wastewater. The Town currently employs twenty-eight (28) staff members and is currently considered "fully staffed". Additional positions in public safety and public works are anticipated over the next several years.

The Town is strongly influenced by large residential subdivisions located within unincorporated Elbert County as well as the nearby communities of Castle Rock, Parker, Aurora, Centennial, and the Denver Tech Center. The Town of Elizabeth is the focus of commerce within Elbert County, having restaurants, shopping, a Safeway, and a Walmart within proximity to the Town. However, Elizabeth also serves largely as a "bedroom" community for those working in nearby jurisdictions. The last five (5) years have fundamentally changed Elizabeth by increasing the size of the community, and with it, corresponding impacts on the Town's infrastructure and operations.

1.3 Project Goal

Elizabeth desires a sound, actionable, and fiscally responsible facilities plan that supports the entire city government organization by providing safe and inviting work environments that meet the varying operational needs of all Town departments.

The Town's intent is to retain a consulting firm with the qualifications and staff resources necessary to perform city governmental facility planning services including, but not limited to, conditional assessment, space and programming needs assessment, and development of a long-term facilities master plan. The facilities master plan should focus on the preservation and potential redevelopment and/or readapting of current facilities as well as the identification of

and/or planning for new facilities to establish a framework for the anticipated Town facility needs for the next twenty (20) years.

1.4 Schedule of Events

Request for Proposals (RFP) Released:	June 27, 2025
Deadline for Written Questions to the RFP:	July 10, 2025
Deadline for Town's Response to Written Questions:	July 14, 2025
Proposals due:	August 27, 2025
Consultant interviews (if held):	September 3, 2025
Notice of Intent to Award:	September 5, 2025
Board of Trustees Action on Award:	September 9, 2025
Contract starts:	September 10, 2025
Desired Project Completion:	January 7, 2026

SECTION II: SCOPE OF WORK TO BE PERFORMED BY CONSULTANT

2.1 Scope of Work

The following scope of services is included as a guide for the proposer. It is designed to identify the minimum service level expected from the successful firm and as such should be modified and augmented based upon the experience of the firm, as necessary to complete the project:

Space and Programming Needs Assessment

A. The Consultant shall conduct interviews with designated Town representatives to elicit individual perspectives of problems needing solutions and observations of past, current, and expected future operational and facility needs and deficiencies.

B. For each building, the Consultant shall provide building programming to:

1. Identify the nature of work performed in or function of each workspace.

2. Identify on an inter-departmental basis and on an intra-and inter-divisional basis what working relationships exist and the level of intensity of those working relationships.

3. Identify the physical proximity needs of the aforesaid interdepartmental and inter-and intra-divisional working relationships.

4. Assess whether the proximity of work performed in one space and interrelated with work performed in another space promotes or inhibits the effectiveness and efficiency of the overall work performed in the two or more spaces.

5. Identify the number of employees using each space.

6. Identify ancillary and accessory programming requirements, such as, but not limited to, data and communications, conference/meeting rooms, printer/copier areas, and file & storage space. Also include functional spaces, such as restrooms, mechanical spaces, vestibules, stairwells, elevators, hallways, and similar space allocations.

7. Identify security issues, concerns, and ways they can be addressed.

8. Assess whether the space is currently adequate given the nature of the work performed therein or the function thereof, to include available information technology infrastructure.

9. Assess whether the space will be adequate in the foreseeable future (5, 10, 15, and 20 years out) given the nature of the work performed therein or function thereof and the possible expansion of the work or the number of employees performing such work.

10. Assess each facility's exterior features that support the facility on its site, including public and entry access, on-site storage, and vehicle accommodation.

11. Assess parking capacity for public and staff needs including parking for bicycles.

12. Asses public accessibility to public meeting spaces and departmental services

13. Desired image of the organization and desired outward image of current and future facilities.

14. Provide the Town with information about adopted Level of Service standards from similar sized cities with similar budget constraints within Colorado.

15. Develop a list of existing deficiencies based on the recommended level of service standards for each of the Town's services and a reasonable list of projects and cost estimates to either cure the existing deficiencies including, but not limited to the upgrading, updating, improving, expanding, or replacing of such facilities to meet existing needs and usage.

Facilities Conditional Assessment

A. The assessment shall be performed by individuals trained and licensed and/or certified in construction, engineering, or architecture for the specific building systems they are assessing.

B. The assessment shall be conducted in accordance with well-established industry standards.

C. The Consultant shall obtain from the Town, where available, existing drawings and plans and review those drawings and plans for each facility prior to its on-site assessment. It should be noted that in some cases complete records for a particular building may not be available.

D. The Consultant shall perform a non-destructive visual inspection of each facility to identify system-level deficiencies and life-cycle conditions.

E. The Consultant shall review, document, and photograph physical condition deficiencies.

F. The Consultant, in coordination with the Town's Public Works staff, shall provide a facilities conditional assessment document which shall include, but shall not be limited to the following for each facility:

1. A narrative summary of the facility and building system shall be documented in addition to the standard quantitative information.

2. Categorization of immediate, short-term, and long-term capital repair and replacement requirements with project timelines to include:

   a. Assessment of current structural conditions of Town owned/operated building.
   b. Assessment of each building's compliance with all applicable building codes
   c. Estimated life expectancy of the building.
   d. Identification of major repairs which require immediate undertaking (present-5 years out).
   e. Estimate of likely cost of necessary immediate repairs.
   f. Identification of major repairs which will likely be necessary in the foreseeable future (5, 10, 15, and 20 years out).
   g. Estimate of likely costs of the long-term repairs.
   h. Assessment of current mechanical systems and components thereof.
   i. Assessment of the functioning condition of each system and the components thereof.
   j. Estimation of life expectancy of each system and/or components thereof.
   k. Estimation of the likely cost of repairing each system and/or components thereof.

City Government-Wide Facilities Master Plan

A. Facilitate a process to gain consensus among Town departments on a preferred master plan strategy or group of strategies.

B. Using information gathered, provide a master plan which takes into consideration the Town's anticipated future needs for space and the organizational use of such space, including development or use of space or property owned or not currently owned, operated or used by the

Town, if such additional space is deemed necessary to the cost effective and efficient operation of Town government. This exercise should seek to compare the existing building conditions and costs with a comparative future new structure(s) or facility(ies).

C. Develop a short-term (1-4 years), mid-term (5-15 years) and long term (15- 20 years) sequence of events establishing the necessary stages of design, construction, redevelopment, and/or remodeling activity, as the case may suggest, for the preferred strategy taking into consideration the need to maintain services and operations throughout implementation.

D. Thoroughly review all possible funding sources for the proposed City facility improvements and develop a funding mechanism for the proposed improvements.

1. Review all funds available and the status of capital improvements, operations, and maintenance funds for public facilities.
2. Identify different funding sources including State, Federal, and private sources.
3. Include a discussion of potential incentive programs for energy efficient projects.

E. Final documents shall include, but are not limited to:

1. Master Plan Strategies;
2. Preliminary project budgets;
3. Preliminary project schedules meeting the Town's desired timeline in Section 2.2; and
4. Other Relevant/Diagrammatic information.

F. Consultant will participate in a final report to the Elizabeth Board of Trustees for final review, approval, and adoption

2.2 Schedule of Work

The Town expects the Proposer to be selected for award of contract to start work after September 10, 2025. The Town anticipates work to be completed by or before January 7, 2026.

SECTION III: PROPOSAL REQUIREMENTS

3.1 Proposal Instructions

Proposals shall be limited to 10 pages, not including a cover page. Proposals shall be submitted electronically in PDF format to the following email address: hbruce@townofelizabeth.org no later than August 27, 2025, at 4:00 p.m. local time. Proposals received after this deadline will not be considered. Please title the email RFP for Facilities Master Plan and your company name.

Note that proposers responding to the RFP do so solely at their expense, and the Town is not responsible for any proposer expenses associated with the RFP.

Proposals shall include the following:

A. Cover Letter: A Cover Letter by Consultant, if a sole proprietor, or a Principal of the Firm.

B. Executive Summary: Provide a brief statement of the consultant's or firm's history, legal structure, and why you believe the consultant or firm is the best choice for the Town of Elizabeth. Provide information on your philosophy of service, volume of work, financial stability and construction management experience, techniques, and methods.

C. Project Approach: Describe your approach to providing the services outlined in Section 2 – Scope of Work. Discuss how you would provide leadership to facilitate teamwork and communication. Describe the scheduling techniques you will use, and the software employed to produce an effective schedule. Describe how you will identify activities and their duration and how you propose to ensure contractors mobilize, perform, and complete their work according to the schedule you develop.

D. Project Team: Provide information for you or the firm and current resumes for the personnel to whom responsibility for the Town of Elizabeth's projects will be assigned. Provide the title, roles, and responsibilities for each team member and their experience in performing these responsibilities. Provide an organization chart clearly illustrating proposed staffing.

E. Relevant Experience: Briefly describe specific projects that were similar in scope to the Town of Elizabeth project and provide reference contacts.

F. A budget for the project consistent with the project approach and schedule in item 3 above.

3.2 Questions

The City's Project Manager for this effort is:

Patrick Davidson, Town Administrator
Town of Elizabeth
151 South Banner Street

P.O. Box 159
Elizabeth, CO 80107
pdavidson@townofelizabeth.org.

Questions on this RFP should be directed to the Project Manager. Questions can be submitted via email to pdavidson@townofelizabeth.org. Deadline for Questions is 3:00 P.M. July 10, 2025.

If the City's Project Manager believes a question may be relevant to other consultants, the question and answer will be posted on the Town's website (http://www.townofelizabeth.gov/) and provided to all prospective applicants. The identity of the person and firm asking the original question will not be disclosed.

3.3 Consultant Selection Process

The Town of Elizabeth encourages Minority/Women/Emerging Small Business ("MWESB") firms to submit proposals in response to this solicitation and will not be discriminated against on the grounds of race, color, or national origin in consideration for an award of any contract entered pursuant to this advertisement. The Town will enter contract negotiations with the highest ranked consultant. If these negotiations are unsuccessful the Town will select the consultant with the second highest ranked result.

Evaluation and Selection -Each proposal will be limited in length and judged as a demonstration of the Consultant's capabilities and understanding of the project. Evaluation criteria will be as follows:

Contents

• Introductory Letter	Maximum of 5 points possible
• Firm's Capabilities/Project Team	Maximum of 30 points possible
• Project Understanding	Maximum of 30 points possible
• Project Schedule	Maximum of 15 points possible
• Support Information	Maximum of 10 points possible
• Consultants Estimated Total Costs	Maximum of 10 points possible
TOTAL	**Maximum of 100 points possible in evaluation**

Attachment 4.1 Sample of Professional Services Agreement

From:	Patrick Davidson
To:	Angela Ternus; Tracy Hutchins; Loren Einspahr; Michael Schroder; Dave Conley; Steve Gaither
Cc:	Patrick Davidson
Subject:	Weekly Update for 5-9-2025
Date:	Thursday, May 8, 2025 7:35:53 AM
Attachments:	image001.png image002.png image003.png image004.png

---

Good morning, Mayor, Mayor Pro Tem, and Members of the Board of Trustees. Attached is your weekly update.

Town Clean Up. Clean up day is Saturday, May 10th, beginning at 8:00 A.M. Town staff will be arriving around 7:00 A.M. to start to set things up. Please let me know if you have any questions or concerns.

Compensation RFP. You will find on your upcoming agenda (May 13th) a draft RFP for a compensation study. This is driven by our discussions during last Saturday's workshop. I believe we have sufficient time to get this specific RFP out and completed as part of the budgeting process for 2026. It is a tight timeframe but is workable. The item is on the agenda for general direction, and will include a cover memo, the RFP, and a draft of the Professional Services Agreement so that the Board understands the contract that will likely be completed. We can discuss any questions during the presentation on Tuesday.

Facilities Master Plan RFP. I have prepared this document as well based on Board direction from Saturday's workshop. I would like to address this item during the June 10th BOT meeting. There are two ways to proceed: (1) we can put out the RFP in July, with the understanding that work will not commence until 2026, but that will reserve us a spot for completion of the project mid-2026, or (2) we can put the RFP out now, with the understanding that the report is due January 2026. Obviously, to do the RFP now will require a budget amendment for the Capital Improvement Fund, but it gets things lined out for budgeting and action in 2027. The reason for the "skip" to 2027 is that we are anticipating staff attention will be solely on Hillside during next construction season. This allows the Facilities Master Plan to be triggered in 2025, presented early 2026, and ready for implementation in 2027. At this time, I just wanted to bring this to your attention. You will receive a separate email with the RFP for the Facilities Master Plan for later consideration.

Senior Center Discussion. I would propose an evening meeting in June or July to discuss the Community and Senior Center. This would be in addition to a regular Board meeting, and as an alternative to a Saturday meeting. Frankly, after the Saturday Workshop, staff is needing additional direction on how to proceed, and members of the Board had asked for an additional review of the plans, background, and related information. An evening workshop, dedicated solely to this topic would be beneficial to staff.

Development Sketches for 601 Pine Ridge. You will have received a separate email that provides background information on the sketches for this location for the Community and Senior Activity Center.

PROST. I have provided a follow up for the PROST discussion from Saturday. I think the memo provided via separate email should provide some additional background information moving forward.

Mural Installation. The mural on the side of the IOOF building will begin on Monday, May 12th. The building has been repaired, the front has been completed with new siding and windows, and the underlying painting has been completed. The mural is the last item for this step of the process. We will be trying to capture the changes by means of photography and will have updates on social media. The project should be completed that week, weather dependent.

Update on Chamber Events. I am meeting with Mary from the Chamber, and Kevin Whitacre from the Stampede this Monday to try to come to a resolution of the concerns regarding event staffing for the parade.

Community Development Director. I did not have an opportunity on Saturday to visit with the Board on this open department head position. We are receiving no candidates for the position now. I would like to prepare to outsource this work for upcoming projects and would like to find a consultant to perform the work. I do not need any direction, yet, but rather just wanted to keep this on your radar.

Have a great day, and I will see you Saturday for the Town Clean Up event.

Patrick

Patrick G. Davidson, Town Administrator
151 S. Banner Street
Elizabeth, CO 80107
(720) 351-4504
pdavidson@townofelizabeth.org

TOWN OF ELIZABETH POLICE DEPARTMENT

CHIEF OF POLICE JEFF ENGEL

ELIZABETH POLICE DEPARTMENT ACTIVITY STATISTICS REPORT

Period: 04/13/2025 to 04/26/2025

ELIZABETH POLICE DEPARTMENT'S MISSION STATEMENT:

"The Elizabeth Police Department is committed to service excellence in protecting life and property, impartial enforcement of law, and building community with those who live, work, and visit, the Town of Elizabeth."

The following is an informational breakdown of EPD police activity from **04/13/2025 at 12:01 a.m. to 04/26/2025 at 11:59 p.m.** This information is compiled from our Records Management System (RMS), identified as New World (NW), as well as Douglas County Regional Dispatch (DCRD) records.

**All suspects/defendants are presumed innocent until proven guilty in a Court of Law. **

425 S. Main St., P.O. Box 1527, Elizabeth, Colorado, 80107
Phone: 303-646-4664 Fax: 303-646-0616
Email: Police@townofelizabeth.org
www.townofelizabeth.org

Colorado Association of Chiefs of Police

Total Calls for Service:

232

Traffic Stops:

Total Stops:	Penalty Assessments:	Written Warnings:	Verbal Warnings:	Assists to Other Agencies:
27	9	16	1	1

Other Calls for Service:

Call Type:	Number of Calls:
911 Landline	2
911 Rapid SOS	1
Alarm-Bank	2
Alarm-Business Burglary	1
Animal Barking	2
Animal Complaint	3
Animal Cruelty	1
Animal Rescue	1
Assault	3
Assist to Fire Department	2

Assist to Other Agency	4
Attempt to Contact	2
Bar Check	1
Business Check	13
Burglary	1
Citizen Assist	10
Citizen Contact	6
Civil	1
Crime Prevention	6
Criminal Mischief	3
Death	1
Disturbance	1
Dk Subject	1
Domestic-Physical	2
Fireworks Complaint	1
Flock	2
Follow Up	32
Fraud	2
Harassment	1
Increased Patrol	32
Informational Report	1

Juvenile Complaint	1
Littering Complaint	1
Livestock Complaint	2
Medical Assist	7
Missing Child	1
Municipal Ordinance Violation	2
Motor Vehicle Accident with Unknown Injuries	1
Natural Disaster	1
Parking Complaint	4
Report Every Drunk Driver Immediately	1
Restraining Order Violation	2
School Education	2
Sex Offense	1
Solicitor	1
Suspicious Circumstance	2
Suspicious Person	1
Suspicious Vehicle	8
Theft	3
Traffic Complaint	5
Traffic Hazard	4
Traffic Stop	26

VIN Verify	7
Warrant Pickup	1
Welfare Check	6

Open Patrol Division Criminal Investigations:

Case Number:	Call Type:	Details:
23-5311	Financial Crimes	Investigation into financial crimes.
25-1079	Financial Crimes	Investigation into fraud at a local business.
25-1130	Financial Crimes	Investigation into fraud of a citizen
25-1373	Extortion	Investigation into a citizen who was extorted.
25-1496	Vehicle Trespass/Burglary	Investigation into several vehicle trespasses.
25-1736	Financial Crimes	Investigation into fraud of a citizen.
25-2316	Drug Offense	Investigation into a subject property in Town.
25-2491	Death Investigation	Investigation into an unattended death.
25-2643	Theft	Investigation into a theft at a local store.

25-2697	Burglary	Investigation into a Burglary that occurred in the Town.
25-2736	Sex Assault	Investigation into a possible sex assault.
25-2826	Death Investigation	Investigation into an unattended death.

Open Community Services Division Municipal Ordinance Violations:

Case Number:	Call Type:	Notes:
25-1355	Municipal Ordinance Violation	Investigation into accumulation of debris on a property in Town
25-2622	Municipal Ordinance Violation	Investigation into Animal Control Call for Service in Town
25-2658	Municipal Ordinance Violation	Investigation into Animal Control Call for Service in Town.

**Please note that limited information regarding open investigations is available. This is to protect the integrity of the investigations. **

Closed Case/Incident Reports:

Case/Incident Number:	Call Type:	Details:
24-4413	Death Investigation	Ruled a death by suicide by the coroner in the autopsy report.

25-2266	Arson	EPD worked alongside EFR on an ongoing issue of illegal fires in yard during burn restrictions. Based on the investigation, no crime has occurred.
25-2678	Fraud	EPD investigated a reported fraud where a party purchased a used vehicle and received the incorrect title. It was determined to not be a crime, and the correct title was issued.
25-2707	Domestic Violence	EPD investigated a felony level domestic violence incident. The suspect was arrested and booked into the county jail.
25-2741	Theft	A case of mistaken Air pods. A student at EHS mistook a set of air pods as their own and grabbed them after playing basketball with the other party. No crime.
25-2765	Criminal Mischief	EPD investigated a report of damaged property. Victim refused to press charges.
25-2772	Animal Control	A small cat was injured after being struck by a car and later died from its wounds.
25-2789	Fraud	EPD received a report of possible fraud. Investigation determined that there was no loss to the victim and the case was deactivated.
25-2437	Assault	Investigation into an assault involving juveniles.
25-2380	Municipal Ordinance Violation	Investigation into unsheltered storage and abandoned vehicles in Town.
25-2580	Child Abuse	Officers Investigated a reported Child Abuse. No criminal charges were founded.
25-2558	Burglary	Officers Investigated a Burglary at building in Town. No damage was located, and no suspects were identified.

25-2497	Harassment	Harassment was investigated. Due to mental culpability and age no charges were filed.
25-2408	Motor Vehicle Accident	Motor Vehicle Accident with no injuries.
25-2596	Dog Bite	Officers responded to an animal bite that occurred in Town. Owner was issued a Municipal Summons.
25-2437	Assault	An Assault was investigated. After investigation, probable cause was found to support charging. The suspect was issued a Municipal Summons for Assault.
25-2638	Restraining Order Violation	Officers responded to the Restraining Order Violation. After investigation no violation was found.
25-2640	Criminal Mischief	Officers responded to damage to a vehicle from concrete spilling on the roadway.
25-2663	Warrant	Officers contacted a person with an active arrest warrant. They were arrested and transported to the jail.
24-4492	Municipal Ordinance Violation	Municipal Ordinance Violation in Town. A Municipal Summons was issued.
25-2420	Child Abuse	Officers investigated alleged child abuse, and after investigation it was unfounded.

Historical Data:

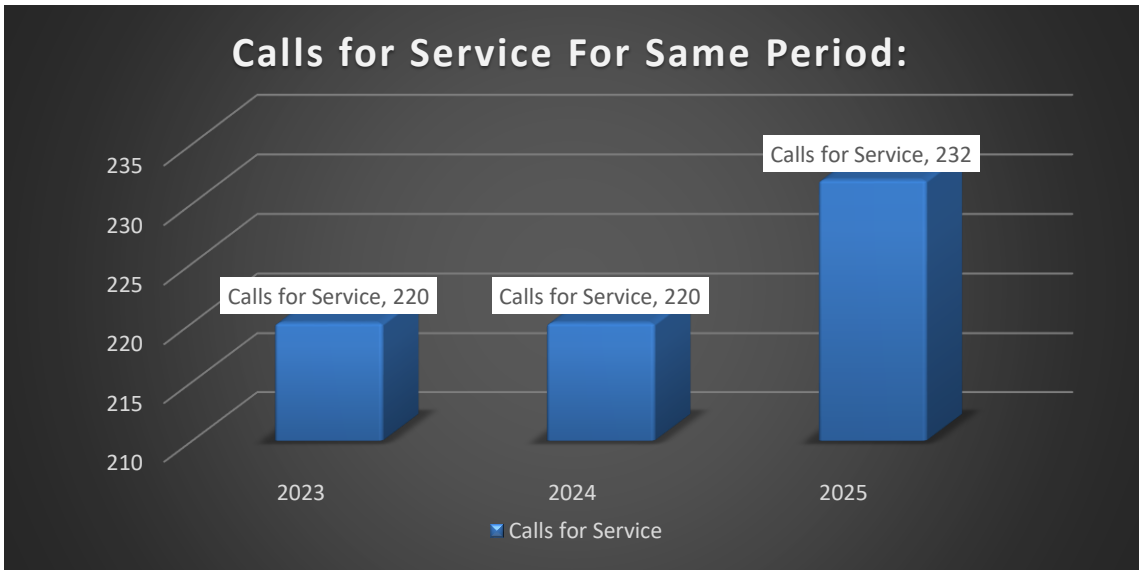

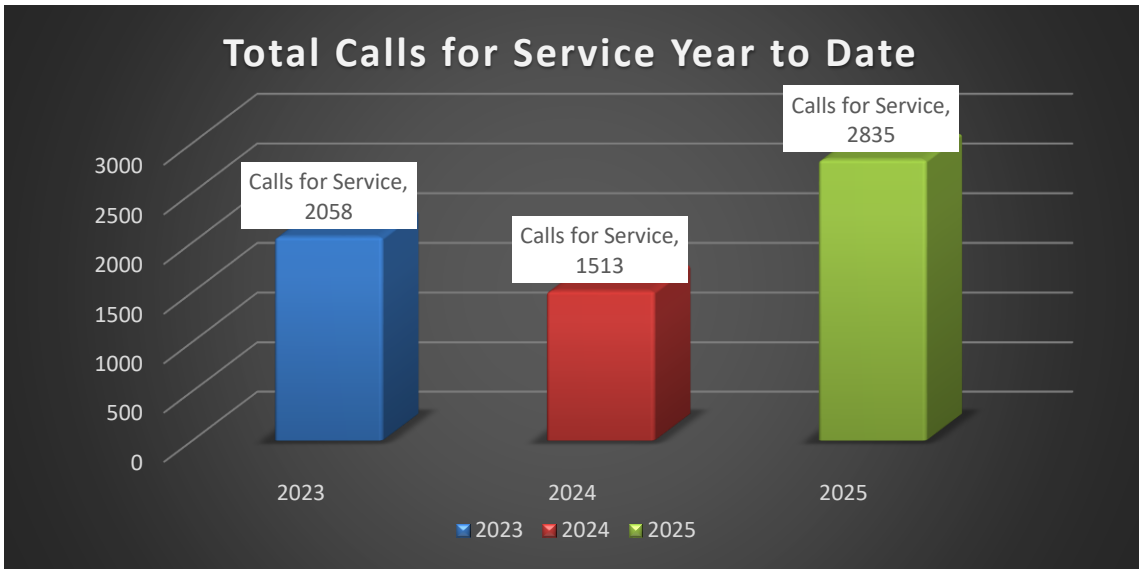

425 S. Main St., P.O. Box 1527, Elizabeth, Colorado, 80107
Phone: 303-646-4664 Fax: 303-646-0616
Email: Police@townofelizabeth.org
www.townofelizabeth.org

Colorado Association of Chiefs of Police

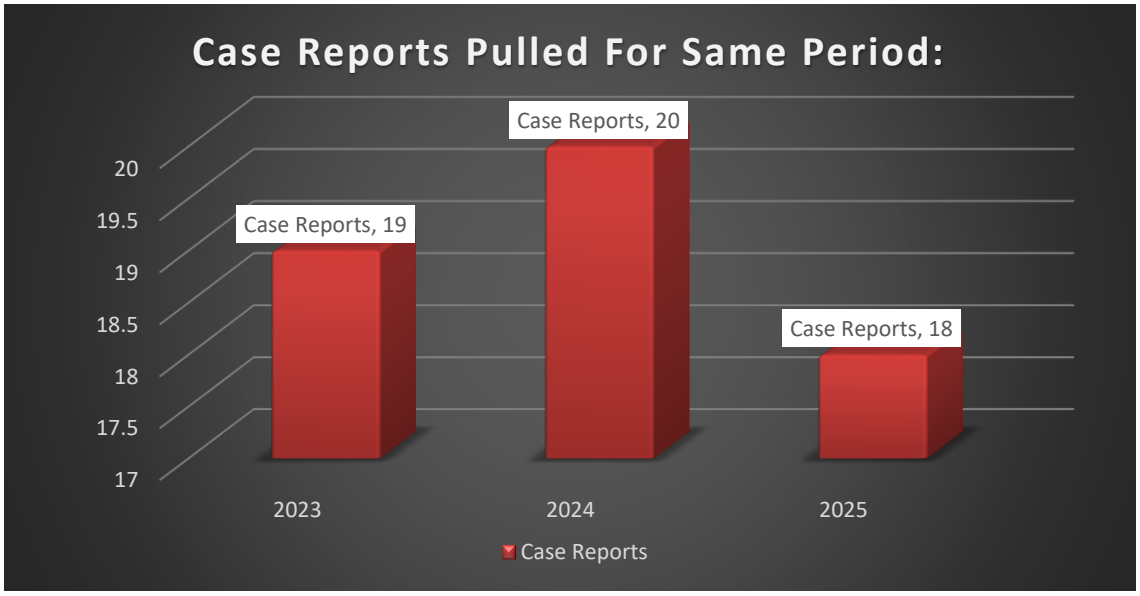

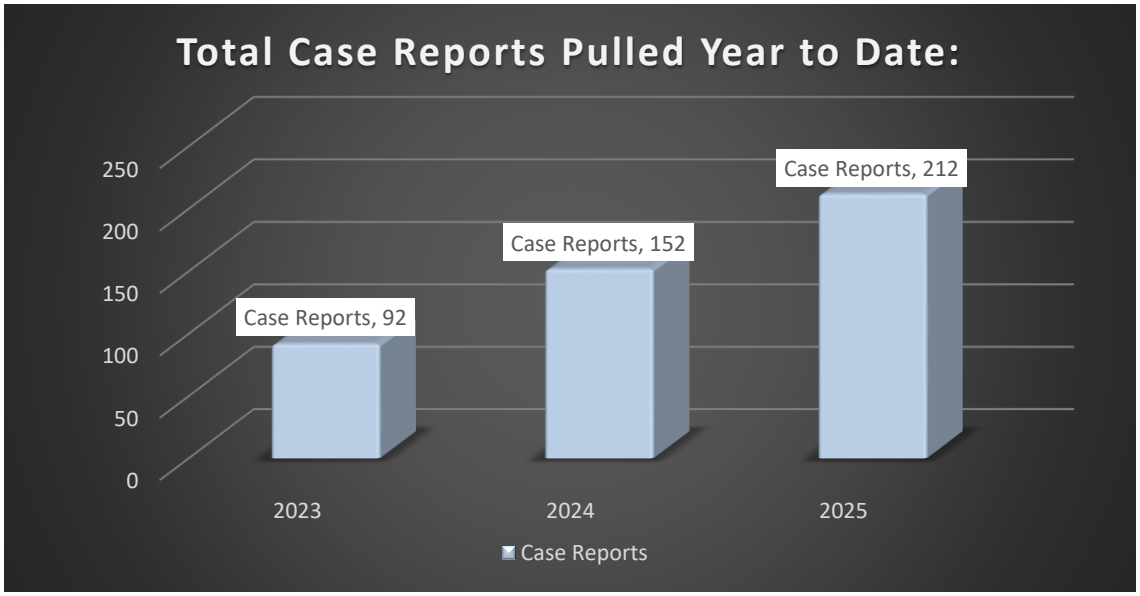

425 S. Main St., P.O. Box 1527, Elizabeth, Colorado, 80107
Phone: 303-646-4664 Fax: 303-646-0616
Email: Police@townofelizabeth.org
www.townofelizabeth.org

Colorado Association of Chiefs of Police

TOWN OF ELIZABETH

MIKE DEVOL, PUBLIC WORKS DIRECTOR

TO: Honorable Mayor, Mayor Pro-Tem and Town Board of Trustees
FROM: Mike DeVol, Public Works Director
DATE: May 13, 2025
SUBJECT: Public Works Monitoring Report

*Town Street Paving Improvements Project:
1. Ongoing projects for the year 2025.

*Town Main St. Decorations:
1. Will remain down for Mainstreet Streetscape project.

*Town Wells, Tanks and Effluent:
1. Please see attached SB 25-305 State Bill CDPHE findings.

*Town Water Line (NON) Emergency Repair:
1. No reports during this reporting period.

*Town Hall/ Repairs/ Landscaping Plan:

*Town Walkway Repairs:
1. PW will be completing repairs to various locations throughout town.
2. PW continues to monitor three areas of concern for sidewalks that are heaving due to freeze and thaw conditions consistent for our area.

*Town Street Maintenance/Striping Projects:
1. Striping will take place in the spring/summer of 2025 as needed.

*Town Snow Plowing and Street Sweeping: SNOW SEASON is almost completed for 2025
1. Public Works has begun sweeping of the streets and removing ice and snow as needed.

▪ PO Box 159, 151 S. Banner Street ▪ Elizabeth, Colorado 80107 ▪ (303) 646-4166 ▪ Fax: (303) 646-9434 ▪
www.townofelizabeth.org

2. Public Works has completed the cleaning of Storm Sewers throughout town.

*Town New Wells at Ritoro/Gold Creek Valley:

1. The new Wells building is complete, and PW is planning an Open House Grand Opening in the Summer of 2025.
2. Landscaping will take place in 2025 and PW will work with the 4 adjacent property owners for their approval of the landscape sketch to ensure that we conceal as much of the building as possible from their views.

*Town Trail Project:

1. Town Trails are cleared of snow as soon as the storm has stopped for use by the public.

2. PW has seen increased parking along Hwy 86, Harvest Bible and RC Elementary school for trail enthusiasts.

*Gold Creek Lift Station Improvements:

1. Completion of project has begun warranty period and filing completion with CDPHE Permitting.

*Eligibility Surveys for Water and Wastewater Capitol projects have been completed for 2024/2025 and accepted by Colorado Department of Public Health and Environment (CDPHE). The eligibility surveys allow the town to be in line for any funding that may be available for future projects.

*Gold Creek Wastewater Treatment Plant (GCWWTP)

1. No Report

*Town Clean Up Day/ Paint Round-Up/Arbor Day

1. Town Clean Up Day is re-scheduled for May 10th at PW yard located at 303 Washington St from 8am-1200 noon. Due to conflicting “Meat-In” festivities.

*Town Public Works News

1. Public Works has filled one Water/Wastewater position open for 2025 and filled 1 position for Streets/Parks for 2025. Public Works is fully staffed currently.
2. Main Streetscape project is moving forward on schedule at this time, with the paving/asphalt of Broadway St and Elm St east of Main St. Public Notifications have been released for the weekly schedule.
3. Depot Parking Lot Pre-con has taken place; earthwork will commence on May 12 along with various other activities before stampede weekend.

*Town Farmers Market:

1. PW is gearing up for the 2025 season.

*Town Parks and Right of Way

Upcoming Projects:

1. PW has completed 2024 the CDPHE Annual Reporting:
2. Annual Biosolids has been completed for 2024 and sent to CDPHE.
3. Regulation 85 Nutrient Monitoring/Accepted by CDPHE
4. PW has completed a round of PFAF's (radiation/radiological). Results have been reported to CDPHE.
5. Water Augmentation and Recording
6. Water Lead and Copper sampling
7. Water Constituents Metals Sampling
8. Annual DMR (Daily Monitoring Report) Gold Creek Wastewater Plant
9. Tree City USA Application/ Accepted and approved by Tree City USA
10. Trail DOLA findings and Inspections/ Addition of Willow Cuttings Planted
11. PW has completed Highway User Tax Fund (HUTF) reporting and data processing.
12. PW is completing Lead and Copper testing per CDPHE guidelines for 2024
13. Flushing of the entire town's water supply system is completed every 6 months.
14. Cleaning of Storm Drainage systems.

Mike DeVol
Town of Elizabeth
Public Works Director

GCWWTP Operations
303-913-6453
mdevol@townofelizabeth.org

TOWN OF ELIZABETH

CLERK'S/FINANCE OFFICE MANAGER'S REPORT

May 13, 2025

The Clerk's / Finance report reflects updates provided by individual Staff members.

Hannah

- While still not a pro like Michelle or Harmony, I have been doing payroll for a couple of payroll periods now.
- I have continued to work with the school district on the Fuel IGA details. We now have all our employees set up in the system with their own Employee ID's and PIN's. I am creating something employees can keep on them, or in their vehicles that will help them to remember the first couple of months.

Allison

- We only have about 31 businesses left that still need to renew their business licenses. Delinquent notices have been mailed out to those businesses. I am also contacting food trucks which have registered with the County to find out if they are planning to do business in Town, which would mean they will need a Food Truck License.
- Watering schedules are set to begin June 1st. Notices to residents with schedule calendars will be mailed out this week. Not much has changed other than the times to water are before 8am and after 8pm.
- I have been working with fellow members of various CMCA committees. I drafted a proposed process for the Legislative Committee for communication between CMCA and CML, as well as between different CMCA committees. I continued work on a Municipal Clerk survey for the Education Committee and will be creating a "Short Shot" on New Clerk Orientation.

Harmony

- I had a fantastic time at the Laserfiche conference. This conference is always jam packed with information and classes to help us utilize this software to its full potential.
- The new website is LIVE! It is finally nice to see it up and running and not just talked about. I hope you have had the opportunity to explore the new format. Our next major step is to have an audit done to make sure we are meeting all of our digital accessibility requirements.
- The clerk's office is actively in our training mode for the new agenda management program. This new program will integrate with our new website and be more in line

with the digital accessibility laws. We expect this should be implemented and in use within the next couple of months.

Michelle

- This year's Town Neighborhood Block Parties are scheduled for June 11th, July 16th, and August 13th. Locations to be announced. Please mark your calendars. We are going to integrate a bit of the Town's 135th Birthday with the addition of cake and ballons. More information will be coming soon.
- April 16th was an Estate Planning Class, there were 40 people in attendance. People really appreciate the town supporting these classes. Foxes Pizza provided pizza for dinner.
- On April 21st the monthly Senior Luncheon was on the History of Elizabeth. Bob and Lynn from the Historic Advisory Board did a fantastic job! Mother Cluckers provided lunch to everyone, as well as presenters, speakers, staff, fire fighters, and sponsors. There were 39 people in attendance, this was our largest crowd yet for a Senior Luncheon.
- There were 41 new cases, 2 continuous, 2 pre-trials, 7 reviews, and 1 show cause on the May Court Docket.

FUNDRAISER

EVENT

Skip the store-bought flowers this year—support local organizations and get beautiful blooms for less than half the price!

ALL funds will be donated directly to the Elizabeth Food Bank and the Senior Care Packages through the Town of Elizabeth

SATURDAY, JUNE 7TH 9AM - 3PM

GESIN LOT ON MAIN ST IN ELIZABETH

This would not be possible without our incredible sponsors!!

ENGLE HOMES GROUP eXp REALTY

Means Agency FARMERS INSURANCE 303-646-9701

ELIZABETH COLORADO

Senior Educational Luncheon

Fraud

Presented by:

Hazel Hecker of the Colorado Bureau of Investigations

Are you concerned about protecting yourself from fraud? Want to learn how to safeguard your finances and personal information? Join us for an informative and engaging Fraud Prevention Class! Led by an expert in the field, this class will cover essential topics.

Light lunch will be served.

Elizabeth Fire will also be offering free blood pressure checks.

MON MAY 19	11:00AM-12:30PM	151 S. BANNER ST. ELIZABETH, CO	RSVP: MARJORIE ENGLE 303-881-2707

Sponsored by:

Marjorie Engle
Jennifer Maxwell
Town of Elizabeth

FREE

Town of Elizabeth Birthday Bash Movie Night

Friday

September 19

Details

Coming Soon

HISTORIC ADVISORY BOARD – RECORD OF PROCEEDINGS
February 3, 2025

CALL TO ORDER

The Regular Meeting of the Historic Advisory Board was called to order on Monday, February 3, 2025, at 4:34 PM by Chair Dennis Rodriguez.

ROLL CALL

Present were Chair Dennis Rodriguez, Vice Chair Jacque Hallet, Historian Bob Rasmussen, and Board Members John Quest, Lynn Mitchell, and Gayle Gardner. There was a quorum to conduct business.

Also present were Planner/Project Manager Alexandra Cramer, Planning Technician Dianna Hiatt, and Deputy Town Clerk Harmony Malakowski.

PUBLIC COMMENT

Jeff Lehman – Town resident.

AGENDA CHANGES

No agenda changes from Staff.

No agenda changes by the Board.

Agenda set.

CONSENT AGENDA

1. Minutes of the Regular Meeting of January 6, 2025

Motion by Mr. Quest, seconded by Historian Rasmussen, to approve the Consent Agenda as presented.
The vote of those Board Members present was unanimously in favor. Motion carried.

NEW BUSINESS

2. Discussion on May Color Contest

Ms. Cramer provided a Staff report.

Discussion followed and the Board provided direction to Staff.

3. Discussion on "Get to Know HAB" Campaign

Ms. Cramer provided a Staff report. She asked that the Board members return the questionnaire to Staff by February 21st.

4. Discussion on Saving Places Conference

Both Board members and Staff provided insights and takeaways from the Saving Places Conference.

STAFF REPORT

- Planner/Project Manager Cramer:
  - Intern Malakowski wrapped up some audio clips that will be placed on the website soon.
  - The Park, Recreation, Open Space, and Trails Master Plan survey has been launched and is being distributed.
  - Discussion regarding the Town website and updates that are coming.
  - Joint workshop with the Board of Trustees will be scheduled soon.

BOARD REPORTS

No further reports from the Board.

ADJOURNMENT

Motion by Ms. Mitchell, seconded by Vice Chair Hallett, to adjourn the meeting at 5:46 PM. The vote of those Board Members present was unanimously in favor. Motion carried.

Chair Dennis Rodriguez

Town Clerk Michelle Oeser

TOWN OF ELIZABETH INCORPORATED SEAL SEPTEMBER 24 1890 ELBERT COUNTY COLORADO